HANSA · TMP srl

HYDRAULIC COMPONENTS
HYDROSTATIC TRANSMISSIONS
GEARBOXES - ACCESSORIES

Certified Company ISO 9001 - 14001

Via M. L. King, 6 - 41122 MODENA (ITALY)
Tel: +39 059 415 711
Fax: +39 059 415 729 / 059 415 730
INTERNET: http://www.hansatmp.it
E-MAIL: hansatmp@hansatmp.it

HT 12 / A / 452 / 1212 / E

Electromagnetic Clutches

Contents

General Information..... 4 - 5

Electromagnetic Clutches - 3 daNm

Series 30900-1 30900-2..... 6 - 7
Series 30900-1N 30900-2N..... 8 - 9
Series 30900-1N1 30900-2N1..... 10 - 11

Electromagnetic Clutches - 10 daNm

Series 30933 30934..... 12 - 13
Series 30901 30903..... 14 - 15
Series 30901-1/7 30903-1/7..... 16 - 17

Electromagnetic Clutches - 14 daNm

Series 30929 30930..... 18 - 19
Series 30980 30981..... 20 - 21
Series 30929-1/7 30930-1/7..... 22 - 23

Electromagnetic Clutches - 21 daNm

Series 30990 30991..... 24 - 25

Electromagnetic Clutches - 30 daNm

Series 30940/SF 30941/SF..... 26 - 28

Flanges..... 29 - 30

General Information

Electromagnetic Clutches

Running-in is required to obtain the rated torque values of electromagnetic clutches.
Running-in is carried out by engaging and disengaging clutch at high speed several times with the pump in exaust position.

During assembly, make sure that there are no oil or grease traces on pulley surfaces, these must be completely clean.

When assembling electric clutches with front driving flange, check for proper coupling allignement.

Do not exceed the rated torque because this would cause slippage of contact surface with consequent over-heating.

This stage must not last more than 5 seconds since coils could burn.

General Information

Electromagnetic Clutches

Product Overview

Electromagnetic clutches series	Voltage	Rated torque daNm	Pump flanges	Pulley
° 30900-1	12 V DC	3	Gr. 1	diam. 125 mm. 1 Belt Section A (old type)
° 30900-2	24 V DC			
30900-1/N	12 V DC	3	Gr. 1	diam. 125 mm. 1 Belt Section A (new type)
30900-2/N	24 V DC			
30900-1/N1	12 V DC	3	Gr. 1	diam. 125 mm. Belt 4 PLV
30900-2/N1	24 V DC			
30933	12 V DC	10	Gr. 1 - Gr. 2 - Gr. 3 Gr. 2 Bosch - Gr. 3 Bosch SAE A - SAE B	Front type
30934	24 V DC			
30901	12 V DC	10	Gr. 1 - Gr. 2 - Gr. 3 Gr. 2 Bosch - Gr. 3 Bosch SAE A - SAE B	diam. 153 mm. 2 Belt Section A
30903	24 V DC			
30901-1/7	12 V DC	10	Gr. 1 - Gr. 2 - Gr. 3 Gr. 2 Bosch - Gr. 3 Bosch SAE A - SAE B	diam. 152 mm. Belt 7 PLV
30903-1/7	24 V DC			
30929	12 V DC	14	Gr. 1 - Gr. 2 - Gr. 3 Gr. 2 Bosch - Gr. 3 Bosch SAE A - SAE B	diam. 153 mm. 2 Belt Section A
30930	24 V DC			
30980	12 V DC	14	Gr. 1 - Gr. 2 - Gr. 3 Gr. 2 Bosch - Gr. 3 Bosch SAE A - SAE B	diam. 178 mm. 2 Belt Section A
30981	24 V DC			
30929-1/7	12 V DC	14	Gr. 1 - Gr. 2 - Gr. 3 Gr. 2 Bosch - Gr. 3 Bosch SAE A - SAE B	diam. 152 mm. Belt 7 PLV
30930-1/7	24 V DC			
30990	12 V DC	21	Gr. 1 - Gr. 2 - Gr. 3 Gr. 2 Bosch - Gr. 3 Bosch SAE A - SAE B	diam. 186 mm. 2 Belt Section A
30991	24 V DC			
30940/SF	12 V DC	30	Gr. 2 - Gr. 3 - Gr. 3,5 - Gr. 4 Gr. 3 Bosch SAE A - SAE B - SAE C L.G. 20-35-50-75	diam. 229 mm. 2 Belt Section B
30941/SF	24 V DC			

Note: ° On request

Electromagnetic Clutches - Torque 3 daNm (old type)
Pump Group 1
Single "A" Section Pulley

INSTALLATION DRAWING
- 30900-1: 12 Volt
- 30900-2: 24 Volt

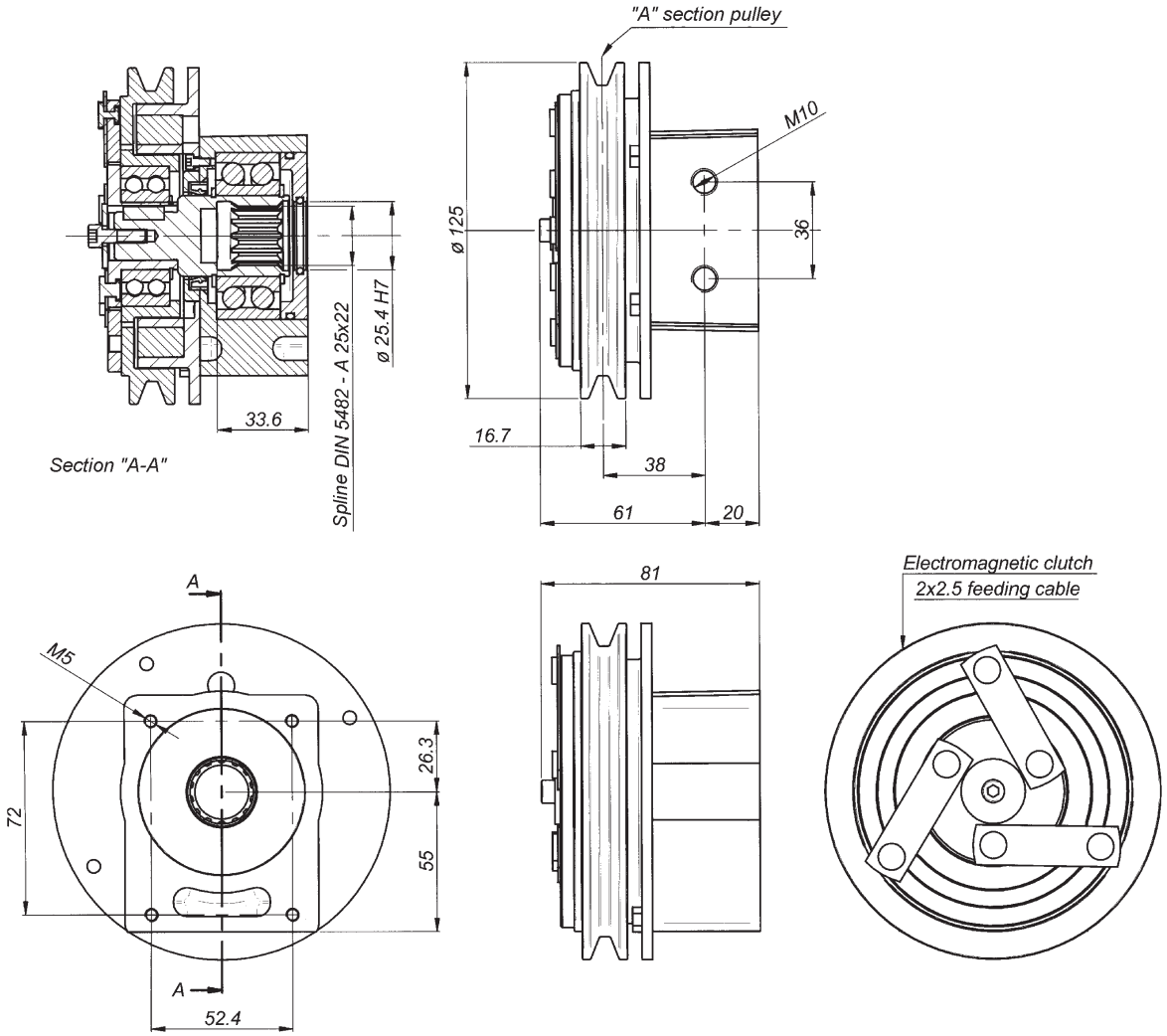

Nominal torque	3,0 daNm		Connection time	25 ms
Static torque	4,5 daNm		Disconnection time	40 ms
Dynamic torque	3,2 daNm	at 500 n/min.	Minimum time between two connections	20 sec
	2,8 daNm	at 1000 n/min.		
	1,7 daNm	at 1500 n/min.		
	1,4 daNm	at 2000 n/min.		
	1,2 daNm	at 2500 n/min.	Max speed	5000 n/min.
	0,9 daNm	at 3000 n/min.	Weight	3 Kg

Electric absorption	Resistance (W)		Current (A)		Power (W)	
Temperature	20° C	120° C	20° C	120° C	20° C	120° C
12 V DC	5,7	7,9	2,1	1,6	25,2	18
24 V DC	21,7	30,7	1,1	0,8	26,5	19

All technical data are at 20°C / at 120° C the performance is 20% reduced.
All electromagnetic clutches are reversible.

Electromagnetic Clutches - Torque 3 daNm (old type)
Pump Group 1
Single "A" Section Pulley

ORDER CODE

° 30900 - 1 - [ ]

Electromagnetic Clutch Series 30900 old type
Torque 3 daNm - Pump Gr. 1 - Single "A" pulley

° 30900 - 1 = 12 V DC
° 30900 - 2 = 24 V DC

Special versions

SPARE PARTS LIST

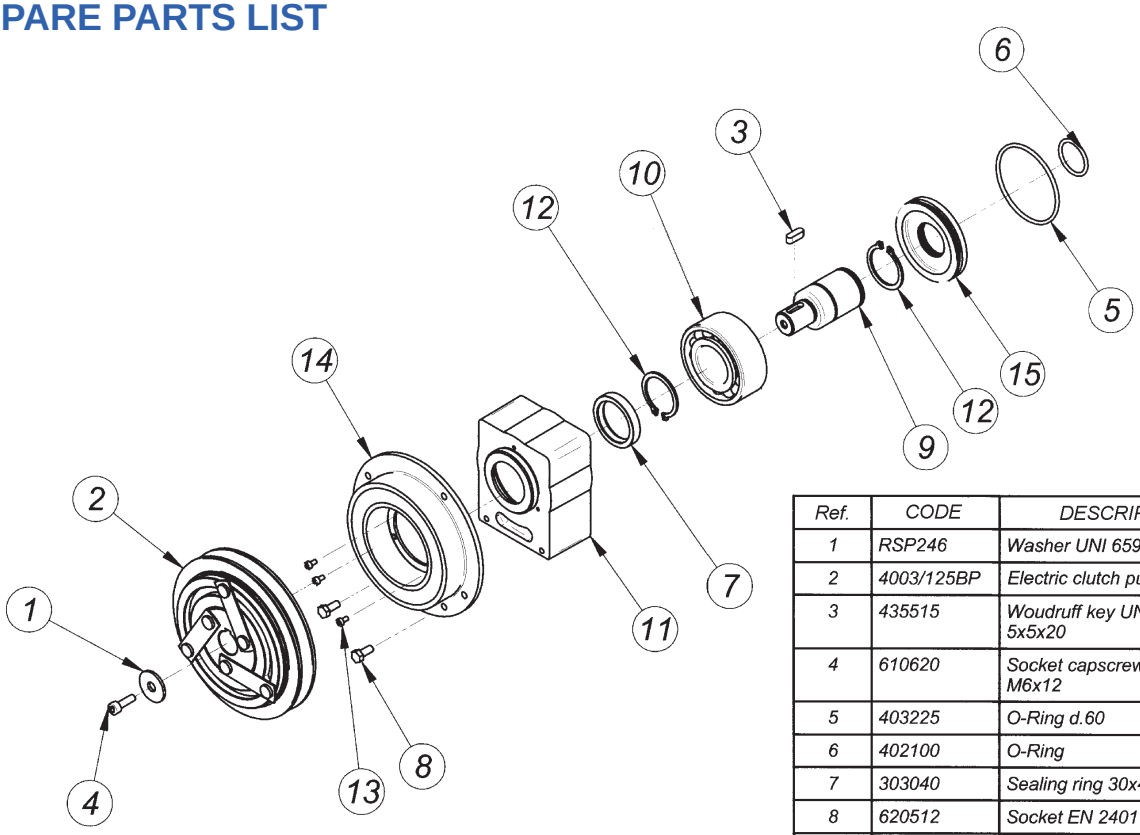

Ref.	CODE	DESCRIPTION	Q.ty
1	RSP246	Washer UNI 6593 - 6x24x2	1
2	4003/125BP	Electric clutch pulley	1
3	435515	Woudruff key UNI 6604 5x5x20	1
4	610620	Socket capscrew UNI 5931 M6x12	1
5	403225	O-Ring d.60	1
6	402100	O-Ring	1
7	303040	Sealing ring 30x40x7	1
8	620512	Socket EN 24017 M5x12	2
9	AC30900	Shaft	1
10	503206	Bearing SKF 3206	1
11	30009-3/V	Housing	1
12	903000	Snap ring UNI 7436 - 25	2
13	610306	Socket capscrew M3x6 UNI 5931	3
14	401203/125B 402403/125B	Coil	1
15	COP-062	Ring	1

Electromagnetic Clutches - Torque 3 daNm (new type)
Pump Group 1
Single "A" Section Pulley

INSTALLATION DRAWING
30900-1/N: 12 Volt
30900-2/N: 24 Volt

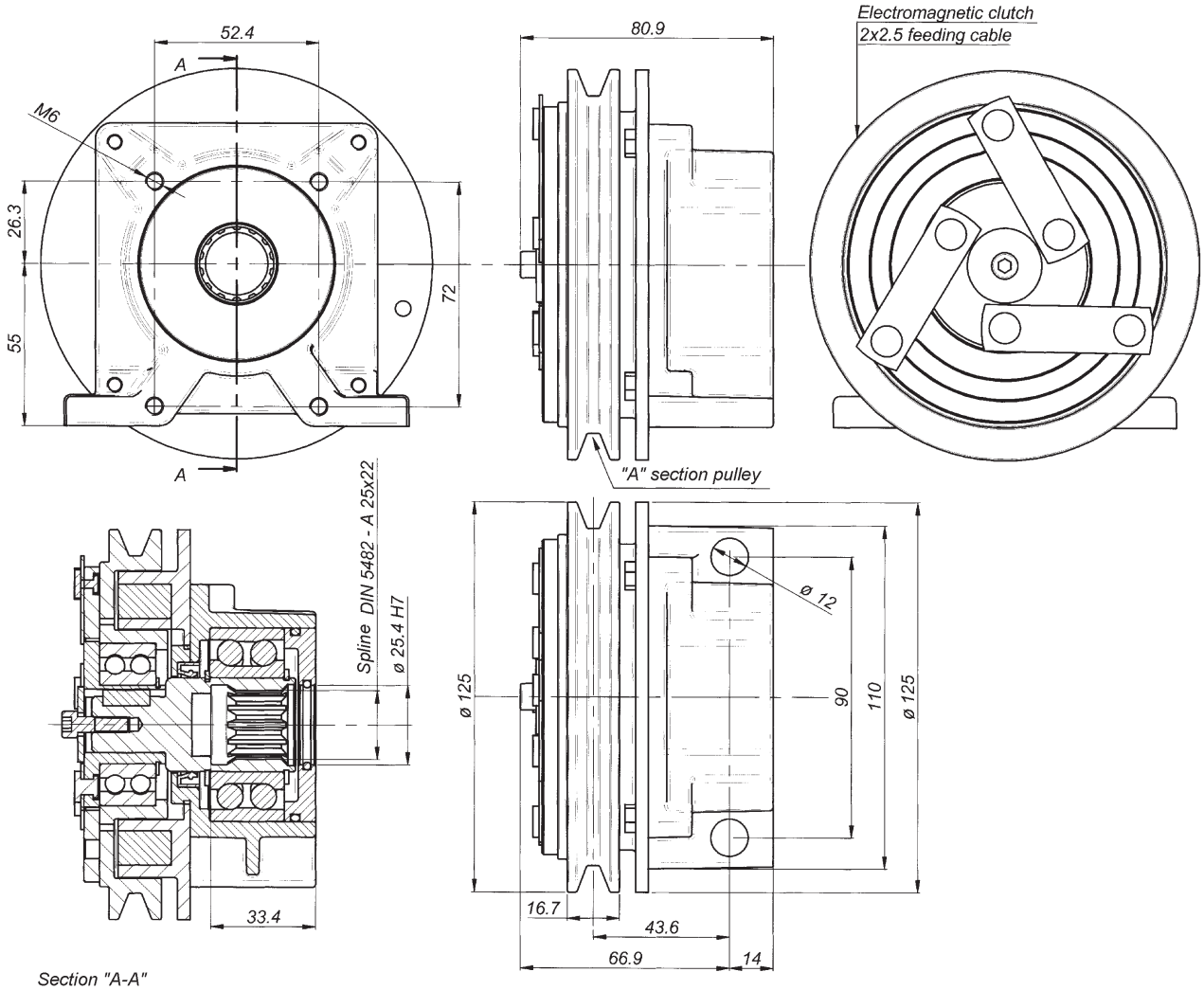

Nominal torque	3,0 daNm		Connection time	25 ms
Static torque	4,5 daNm		Disconnection time	40 ms
Dynamic torque	3,2 daNm	at 500 n/min.	Minimum time between two connections	20 sec
	2,8 daNm	at 1000 n/min.		
	1,7 daNm	at 1500 n/min.		
	1,4 daNm	at 2000 n/min.		
	1,2 daNm	at 2500 n/min.	Max speed	5000 n/min.
	0,9 daNm	at 3000 n/min.	Weight	3 Kg

Electric absorption	Resistance (W)		Current (A)		Power (W)	
	20° C	120° C	20° C	120° C	20° C	120° C
12 V DC	5,7	7,9	2,1	1,6	25,2	18
24 V DC	21,7	30,7	1,1	0,8	26,5	19

All technical data are at 20°C / at 120° C the performance is 20% reduced.
All electromagnetic clutches are reversible.

Electromagnetic Clutches Series - Torque 3 daNm (new type)
Pump Group 1
Single "A" Section Pulley

ORDER CODE

30900 - 1/N - [ ]

Electromagnetic Clutch Series 30900.../N (new type)
Torque 3 daNm - Pump Gr. 1 - Single "A" pulley

30900 - 1/N = 12 V DC
30900 - 2/N = 24 V DC

Special versions

SPARE PARTS LIST

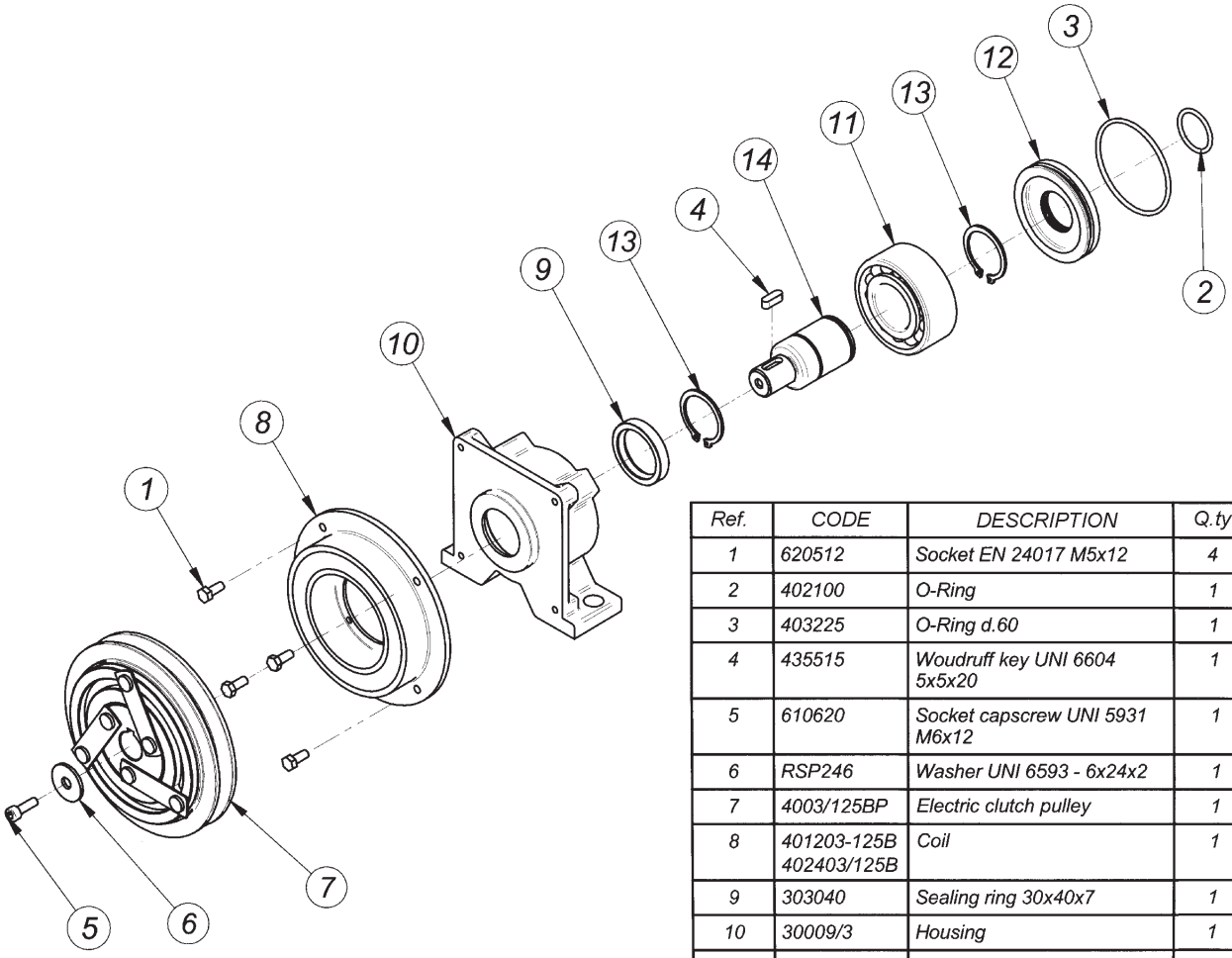

Ref.	CODE	DESCRIPTION	Q.ty
1	620512	Socket EN 24017 M5x12	4
2	402100	O-Ring	1
3	403225	O-Ring d.60	1
4	435515	Woudruff key UNI 6604 5x5x20	1
5	610620	Socket capscrew UNI 5931 M6x12	1
6	RSP246	Washer UNI 6593 - 6x24x2	1
7	4003/125BP	Electric clutch pulley	1
8	401203-125B 402403/125B	Coil	1
9	303040	Sealing ring 30x40x7	1
10	30009/3	Housing	1
11	503206	Bearing SKF 3206	1
12	COP-062	Ring	1
13	903000	Snap ring UNI 7436 - 25	2
14	AC30900	Shaft	1

Electromagnetic Clutches - Torque 3 daNm (new type)
Pump Group 1
4PLV Section Pulley

INSTALLATION DRAWING
30900-1/N1: 12 Volt
30900-2/N1: 24 Volt

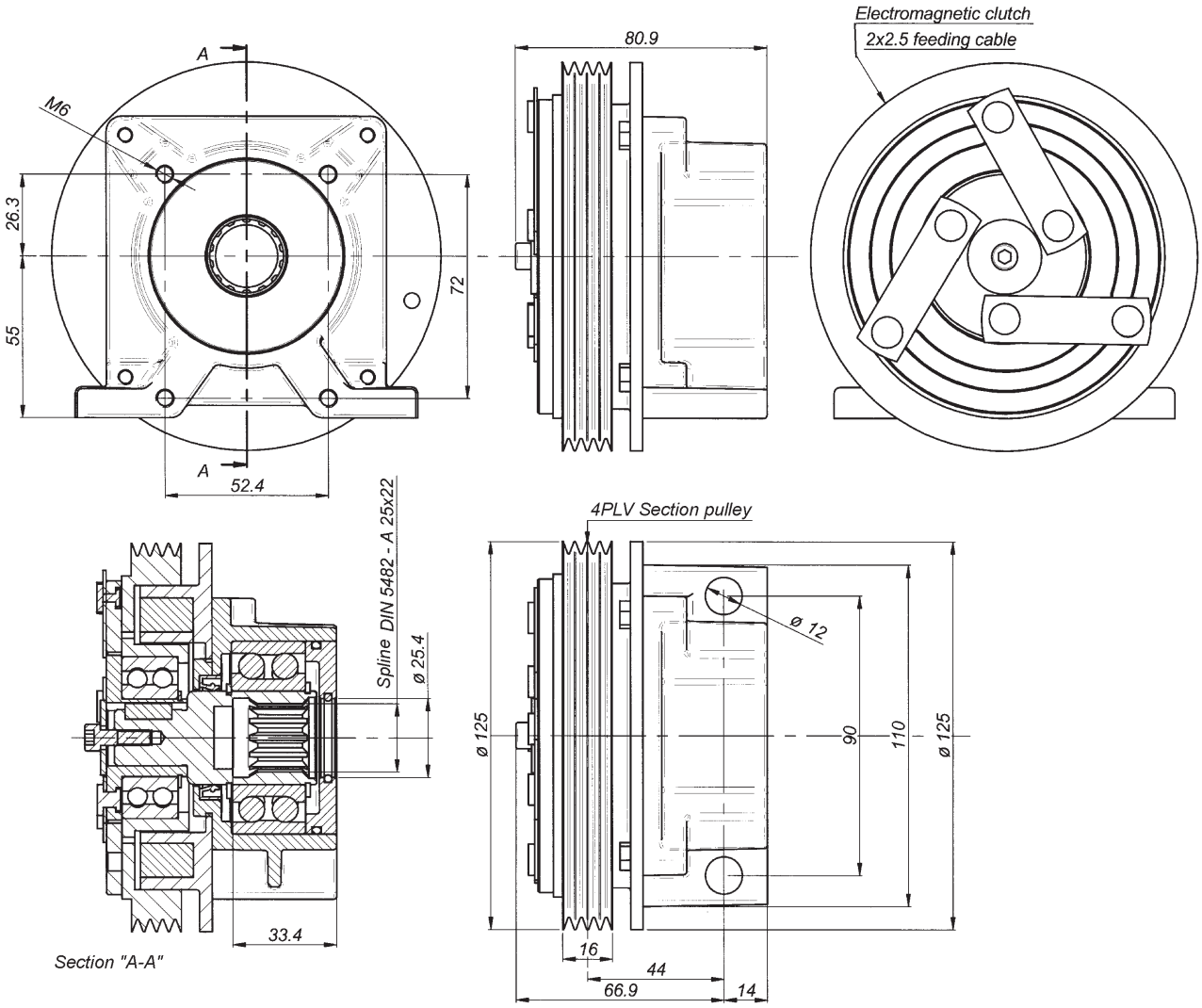

Nominal torque	3,0 daNm		Connection time	25 ms
Static torque	4,5 daNm		Disconnection time	40 ms
Dynamic torque	3,2 daNm	at 500 n/min.	Minimum time between two connections	20 sec
	2,8 daNm	at 1000 n/min.		
	1,7 daNm	at 1500 n/min.		
	1,4 daNm	at 2000 n/min.		
	1,2 daNm	at 2500 n/min.	Max speed	5000 n/min.
	0,9 daNm	at 3000 n/min.	Weight	3 Kg

Electric absorption	Resistance (W)		Current (A)		Power (W)	
	20° C	120° C	20° C	120° C	20° C	120° C
12 V DC	5,7	7,9	2,1	1,6	25,2	18
24 V DC	21,7	30,7	1,1	0,8	26,5	19

All technical data are at 20°C / at 120° C the performance is 20% reduced.
All electromagnetic clutches are reversible.

Electromagnetic Clutches - Torque 3 daNm (new type)
Pump Group 1
4PLV Section Pulley

ORDER CODE

30900 - 1/N1 - [ ]

Electromagnetic Clutch Series 30900.../N1
Torque 3 daNm - Pump Gr. 1 - 4PLV pulley

30900 - 1/N1 = 12 V DC
30900 - 2/N1 = 24 V DC

Special versions

SPARE PARTS LIST

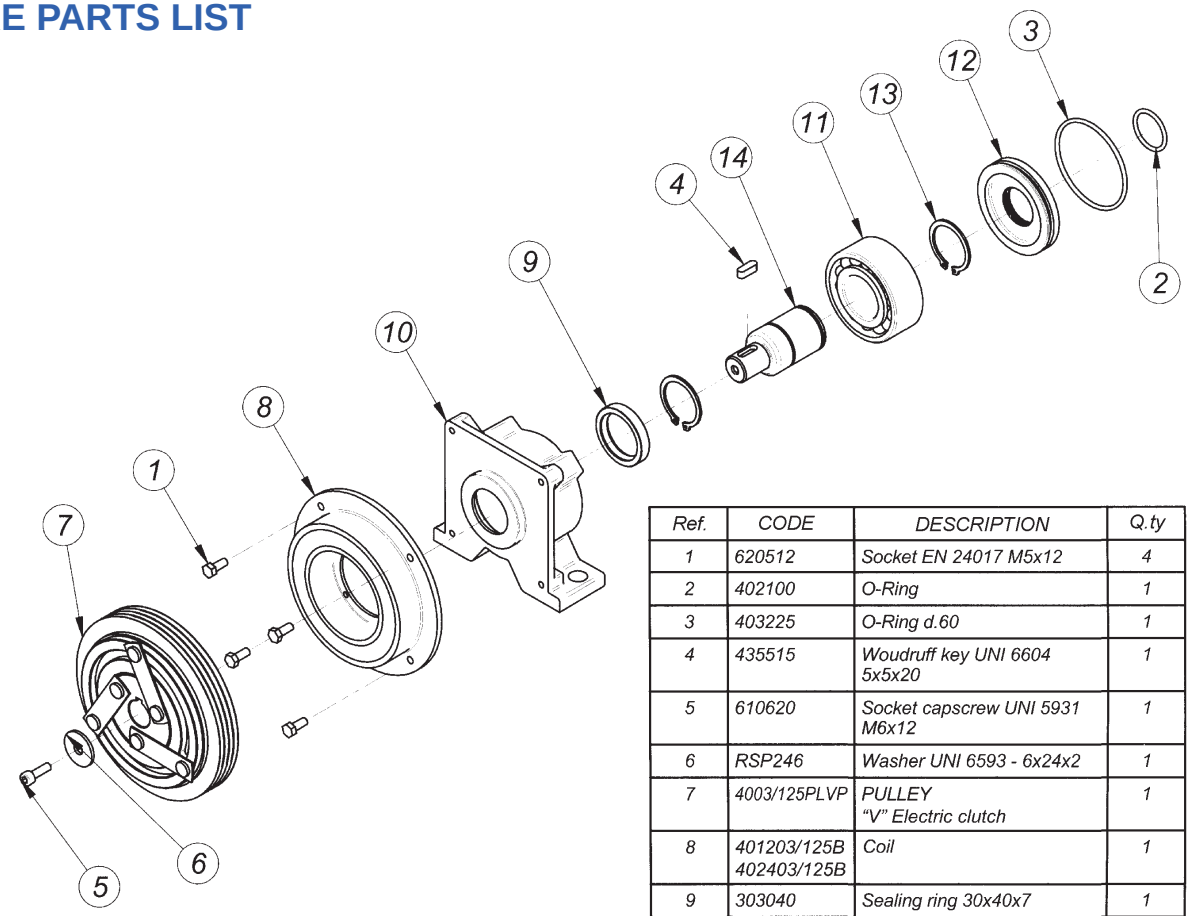

Ref.	CODE	DESCRIPTION	Q.ty
1	620512	Socket EN 24017 M5x12	4
2	402100	O-Ring	1
3	403225	O-Ring d.60	1
4	435515	Woudruff key UNI 6604 5x5x20	1
5	610620	Socket capscrew UNI 5931 M6x12	1
6	RSP246	Washer UNI 6593 - 6x24x2	1
7	4003/125PLVP	PULLEY "V" Electric clutch	1
8	401203/125B 402403/125B	Coil	1
9	303040	Sealing ring 30x40x7	1
10	30009/3	Housing	1
11	503206	Bearing SKF 3206	1
12	COP-062	Ring	1
13	903000	Snap ring UNI 7436 - 25	2
14	AC30900	Shaft	1

Front type Electromagnetic Clutches - Torque 10 daNm
Pump Group: Gr. 1-2-3 - Gr. 2 Bosch - Gr. 3 Bosch - SAE A - SAE B
Without Pulley

INSTALLATION DRAWING
30933: 12 Volt
30934: 24 Volt

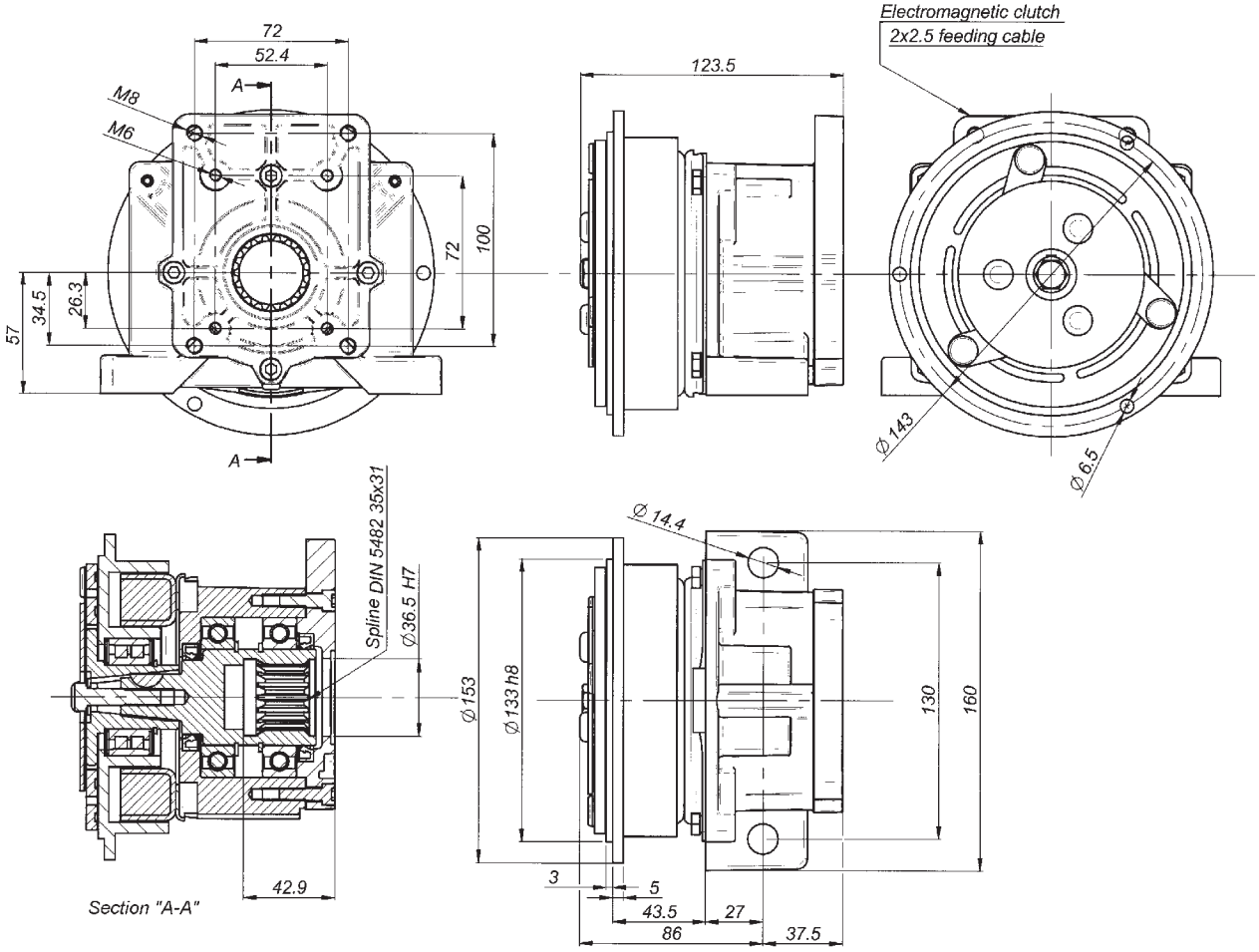

Nominal torque	7,8 daNm		Connection time	25 ms
Static torque	12,5 daNm		Disconnection time	40 ms
Dynamic torque	8,5 daNm	at 500 n/min.	Minimum time between two connections	20 sec
	7,0 daNm	at 1000 n/min.		
	4,2 daNm	at 1500 n/min.		
	3,5 daNm	at 2000 n/min.		
	2,7 daNm	at 2500 n/min.	Max speed	5000 n/min.
	2,5 daNm	at 3000 n/min.	Weight	5 Kg

Electric absorption	Resistance (Ω)		Current (A)		Power (W)	
	20° C	120° C	20° C	120° C	20° C	120° C
12 V DC	4,00	5,60	3,33	2,00	40,00	24,00
24 V DC	20,00	28,00	1,26	0,77	30,30	18,18

All technical data are at 20°C / at 120 °C the performance is 20% reduced.
All electromagnetic clutches are reversible.

Front type Electromagnetic Clutches - Torque 10 daNm
Pump Group: Gr. 1-2-3 - Gr. 2 Bosch - Gr. 3 Bosch - SAE A - SAE B
Without Pulley

ORDER CODE

30935 - 30803 - [ ]

Electromagnetic Clutch Front Type
Torque 10 daNm - Without pulley

Pump Flange	Voltage	Code	Flanges (see page 29)
Gr. 1 - 2	12 V DC	30933	- - Gr. 1 - 2
Gr. 1 - 2	24 V DC	30934	
Gr. 2 Bosch	12 V DC	30933/2B	30817 - Gr. 2 Bosch
Gr. 2 Bosch	24 V DC	30934/2B	
Gr. 3	12 V DC	30935	30803 - Gr. 3
Gr. 3	24 V DC	30936	
Gr. 3 Bosch	12 V DC	30933/3B	30821 - Gr. 3 Bosch
Gr. 3 Bosch	24 V DC	30934/3B	
SAE A	12 V DC	30933/SA	30420.3 - SAE A
SAE A	24 V DC	30934/SA	
SAE B	12 V DC	30933/SB	30420.1 - SAE B
SAE B	24 V DC	30934/SB	

Special versions

SPARE PARTS LIST

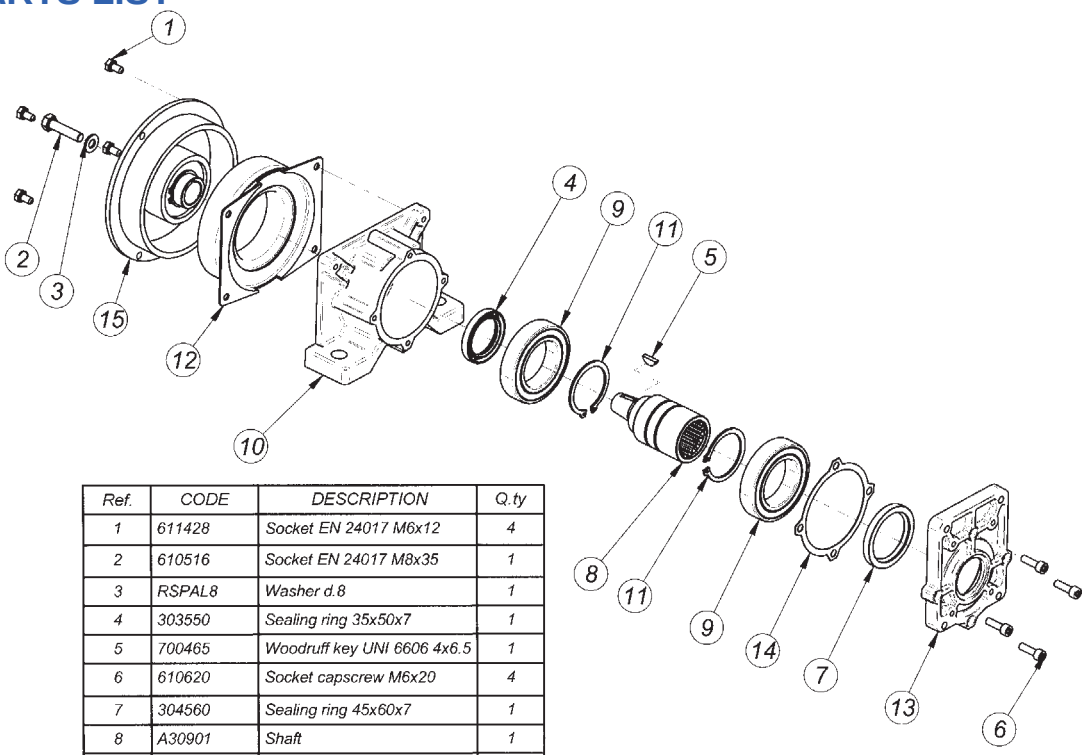

Ref.	CODE	DESCRIPTION	Q.ty
1	611428	Socket EN 24017 M6x12	4
2	610516	Socket EN 24017 M8x35	1
3	RSPAL8	Washer d.8	1
4	303550	Sealing ring 35x50x7	1
5	700465	Woodruff key UNI 6606 4x6.5	1
6	610620	Socket capscrew M6x20	4
7	304560	Sealing ring 45x60x7	1
8	A30901	Shaft	1
9	506009/2Z	Bearing SKF 6009 2RS	2
10	30009.1	Housing	1
11	904500	Snap ring d.45	2
12	401210/FRB 402410/FRB	Coil	1
13	30900.1	Flange for pumps Gr 1 - 2	1
14	30009.1.1	Gasket	1
15	4010/FRBP	Electric clutch	1

Electromagnetic Clutches - Torque 10 daNm
Pump Group: Gr. 1-2-3 - Gr. 2 Bosch - Gr. 3 Bosch - SAE A - SAE B
Twin "A" Section Pulley

INSTALLATION DRAWING
30901: 12 Volt
30903: 24 Volt

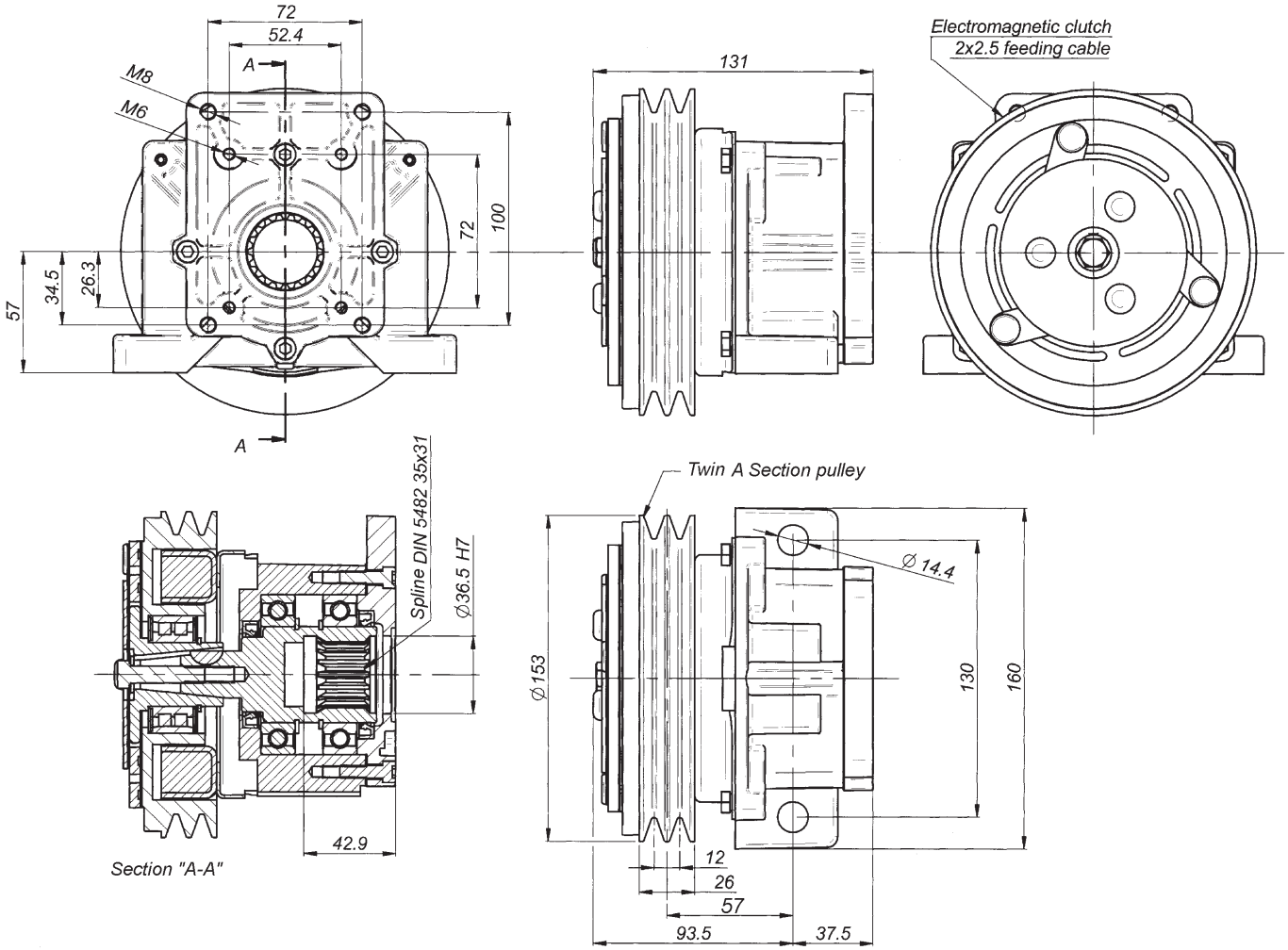

Nominal torque	7,8 daNm		Connection time	25 ms
Static torque	12,5 daNm		Disconnection time	40 ms
Dynamic torque	8,5 daNm	at 500 n/min.	Minimum time between two connections	20 sec.
	7,0 daNm	at 1000 n/min.		
	4,2 daNm	at 1500 n/min.		
	3,5 daNm	at 2000 n/min.		
	2,7 daNm	at 2500 n/min.	Max speed	5000 n/min.
	2,5 daNm	at 3000 n/min.	Weight	5,5 Kg

Electric absorption	Resistance (Ω)		Current (A)		Power (W)	
	20° C	120° C	20° C	120° C	20° C	120° C
12 V DC	4,00	5,60	3,33	2,00	40,00	24,00
24 V DC	20,00	28,00	1,26	0,77	30,30	18,18

All technical data are at 20°C / at 120 °C the performance is 20% reduced.
All electromagnetic clutches are reversible.

Electromagnetic Clutches - Torque 10 daNm
Pump Group: Gr. 1-2-3 - Gr. 2 Bosch - Gr. 3 Bosch - SAE A - SAE B
Twin "A" Section Pulley

ORDER CODE

30909 - 30803 - [ ]

Electromagnetic Clutch
Torque 10 daNm - Twin "A" pulley

Pump Flange	Voltage	Code	Flanges (see page 29)
Gr. 1 - 2	12 V DC	30901	- - Gr 1 - 2
Gr. 1 - 2	24 V DC	30903	
Gr. 2 Bosch	12 V DC	30917	30817 - Gr. 2 Bosch
Gr. 2 Bosch	24 V DC	30919	
Gr. 3	12 V DC	30909	30803 - Gr 3
Gr. 3	24 V DC	30911	
Gr. 3 Bosch	12 V DC	30925	30821 - Gr. 3 Bosch
Gr. 3 Bosch	24 V DC	30927	
SAE A	12 V DC	30901/SA	30420.3 - SAE A
SAE A	24 V DC	30903/SA	
SAE B	12 V DC	30901/SB	30420.1 - SAE B
SAE B	24 V DC	30903/SB	

Special versions

SPARE PARTS LIST

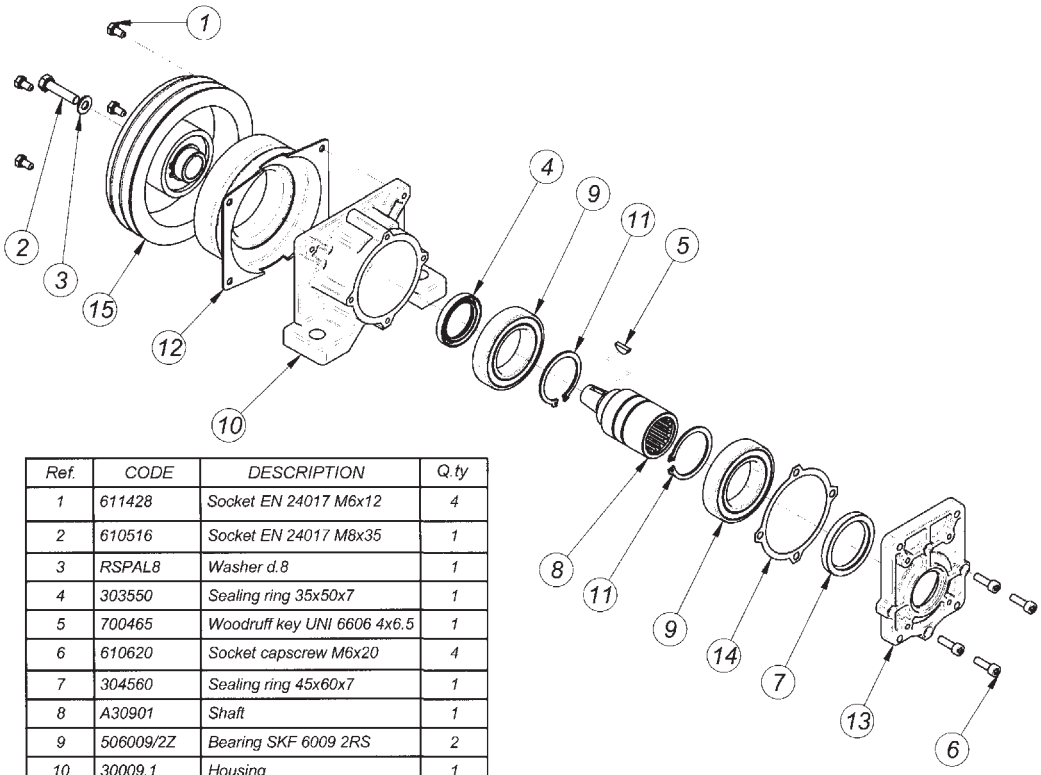

Ref.	CODE	DESCRIPTION	Q.ty
1	611428	Socket EN 24017 M6x12	4
2	610516	Socket EN 24017 M8x35	1
3	RSPAL8	Washer d.8	1
4	303550	Sealing ring 35x50x7	1
5	700465	Woodruff key UNI 6606 4x6.5	1
6	610620	Socket capscrew M6x20	4
7	304560	Sealing ring 45x60x7	1
8	A30901	Shaft	1
9	506009/2Z	Bearing SKF 6009 2RS	2
10	30009.1	Housing	1
11	904500	Snap ring d.45	2
12	401210/153 402410/153	Coil	1
13	30900.1	Flange for pumps Gr 1 - 2	1
14	30009.1.1	Gasket	1
15	4010/153P	Electric clutch	1

Electromagnetic Clutches - Torque 10 daNm
Pump Group: Gr. 1-2-3 - Gr. 2 Bosch - Gr. 3 Bosch - SAE A - SAE B
7 PLV Section Pulley

INSTALLATION DRAWING
30901-1/7: 12 Volt
30903-1/7: 24 Volt

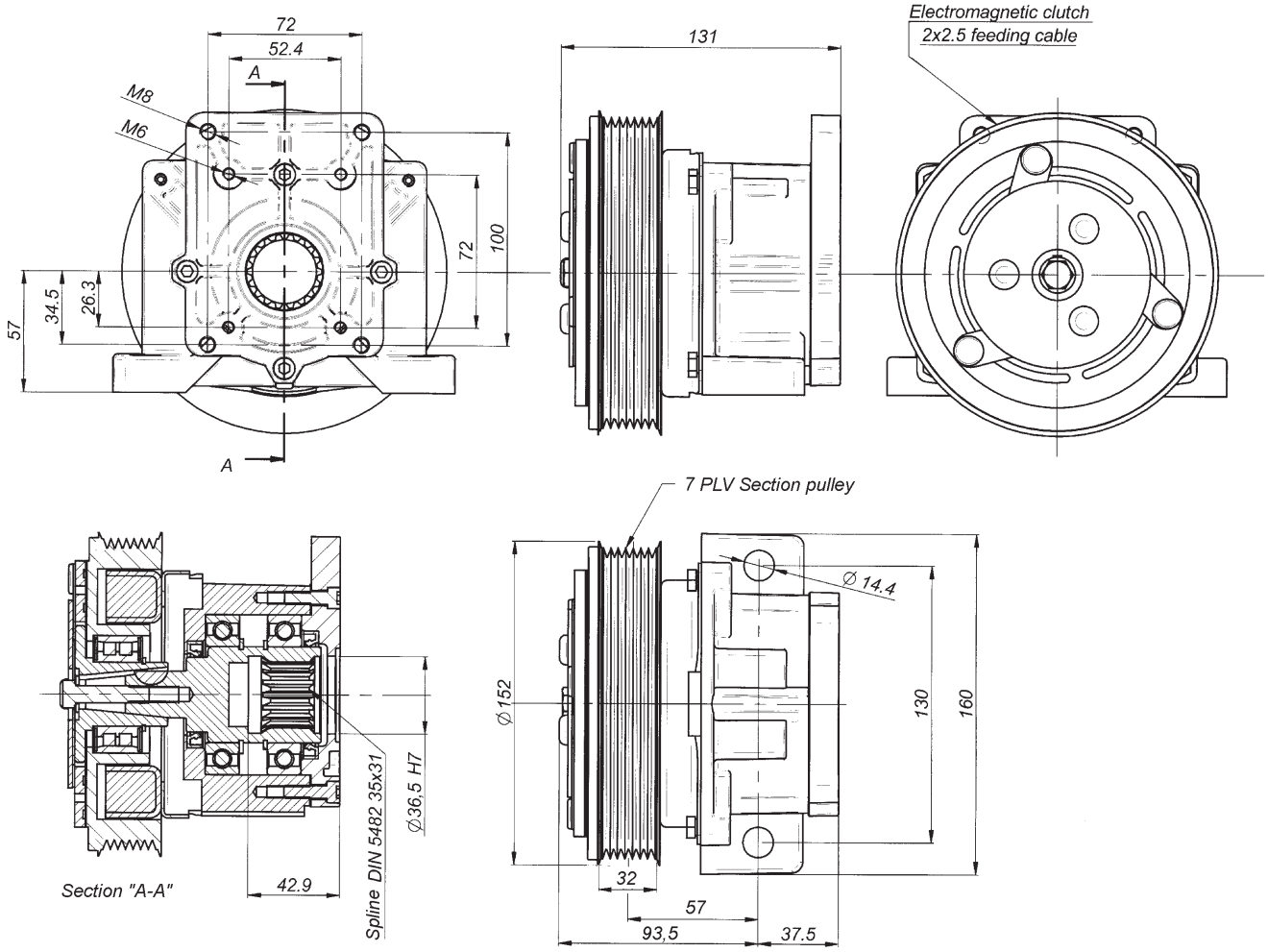

Nominal torque	7,8 daNm		Connection time	25 ms
Static torque	12,5 daNm		Disconnection time	40 ms
Dynamic torque	8,5 daNm	at 500 n/min.	Minimum time between two connections	20 sec
	7,0 daNm	at 1000 n/min.		
	4,2 daNm	at 1500 n/min.		
	3,5 daNm	at 2000 n/min.		
	2,7 daNm	at 2500 n/min.	Max speed	5000 n/min.
	2,5 daNm	at 3000 n/min.	Weight	5,5 Kg

Electric absorption	Resistance (Ω)		Current (A)		Power (W)	
	20° C	120° C	20° C	120° C	20° C	120° C
12 V DC	4,00	5,60	3,33	2,00	40,00	24,00
24 V DC	20,00	28,00	1,26	0,77	30,30	18,18

All technical data are at 20°C / at 120 °C the performance is 20% reduced.
All electromagnetic clutches are reversible.

Electromagnetic Clutches - Torque 10 daNm
Pump Group: Gr. 1-2-3 - Gr. 2 Bosch - Gr. 3 Bosch - SAE A - SAE B
7 PLV Section Pulley

ORDER CODE

30909-1/7 - 30803 - [ ]

Electromagnetic Clutch
Torque 10 daNm - 7 PLV pulley

Pump Flange	Voltage	Code	Flanges (see page 29)
Gr. 1 - 2	12 V DC	30901-1/7	- - Gr. 1 - 2
Gr. 1 - 2	24 V DC	30903-1/7	
Gr. 2 Bosch	12 V DC	30917-1/7	30817 - Gr. 2 Bosch
Gr. 2 Bosch	24 V DC	30919-1/7	
Gr. 3	12 V DC	30909-1/7	30803 - Gr. 3
Gr. 3	24 V DC	30911-1/7	
Gr. 3 Bosch	12 V DC	30925-1/7	30821 - Gr. 3 Bosch
Gr. 3 Bosch	24 V DC	30927-1/7	
SAE A	12 V DC	30901-1/SA	30420.3 - SAE A
SAE A	24 V DC	30903-1/SA	
SAE B	12 V DC	30901-1/7/SB	30420.1 - SAE B
SAE B	24 V DC	30903-1/7/SB	

Special versions

SPARE PARTS LIST

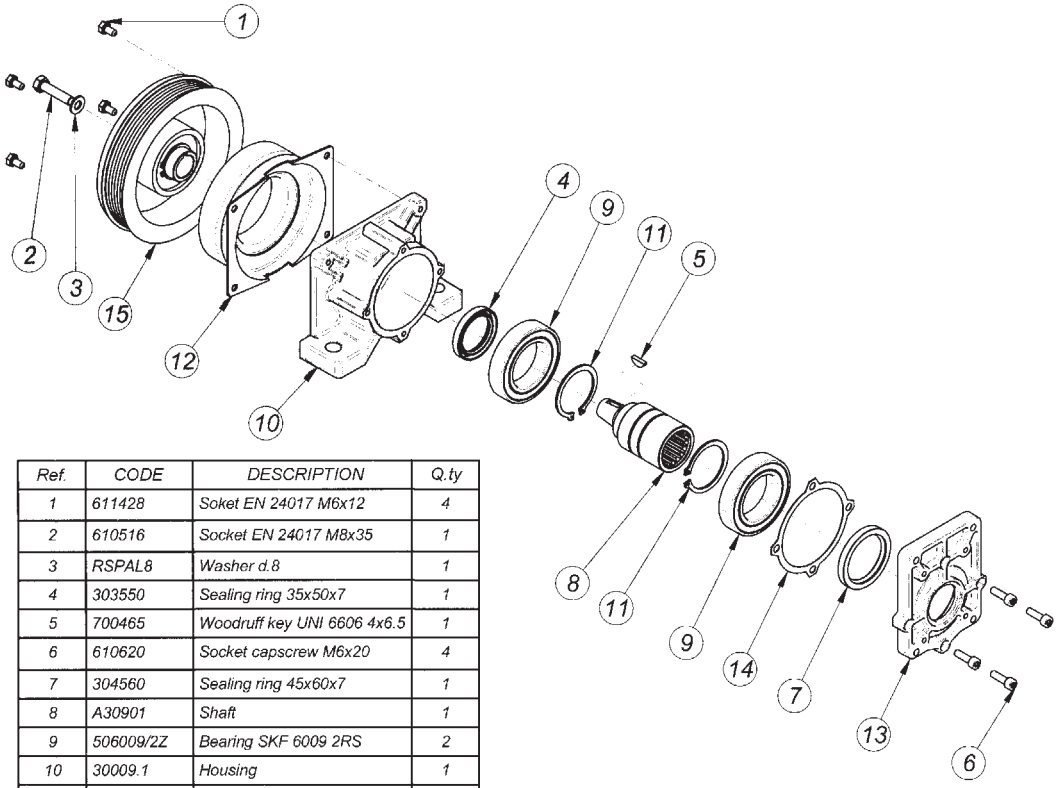

Ref.	CODE	DESCRIPTION	Q.ty
1	611428	Soket EN 24017 M6x12	4
2	610516	Socket EN 24017 M8x35	1
3	RSPAL8	Washer d.8	1
4	303550	Sealing ring 35x50x7	1
5	700465	Woodruff key UNI 6606 4x6.5	1
6	610620	Socket capscrew M6x20	4
7	304560	Sealing ring 45x60x7	1
8	A30901	Shaft	1
9	506009/2Z	Bearing SKF 6009 2RS	2
10	30009.1	Housing	1
11	904500	Snap ring d.45	2
12	401210/PLV 402410/PLV	Coil	1
13	30900.1	Flange for pumps Gr 1 - 2	1
14	30009.1.1	Gasket	1
15	4010/PLV 7	Electric clutch PLV	1

Electromagnetic Clutches - Torque 14 daNm
Pump Group: Gr. 1-2-3 - Gr. 2 Bosch - Gr. 3 Bosch - SAE A - SAE B
Twin "A" Section Pulley diam. 153

INSTALLATION DRAWING
30929: 12 Volt
30930: 24 Volt

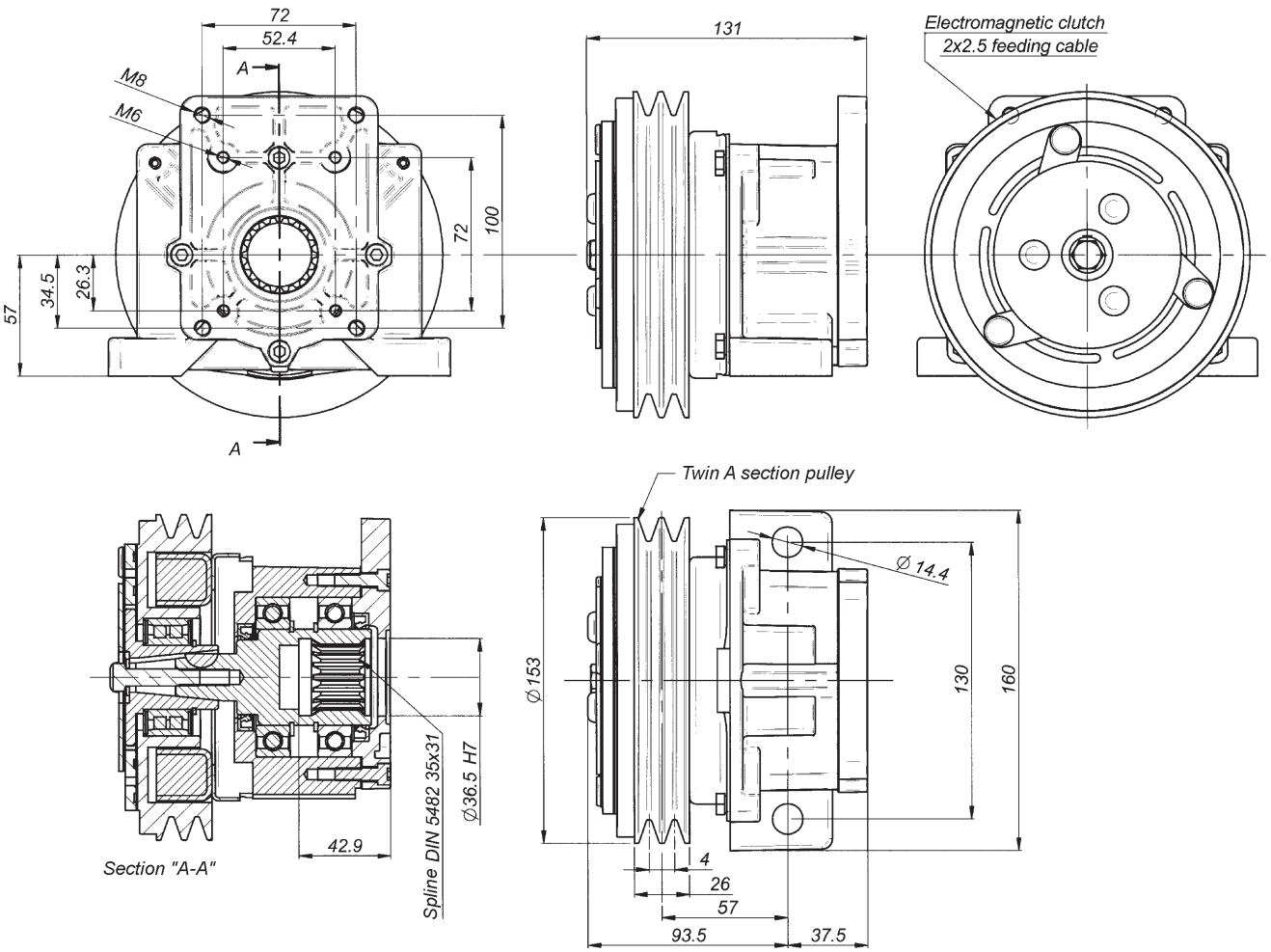

Nominal torque	11,8 daNm		Connection time	25 ms
Static torque	14,0 daNm		Disconnection time	40 ms
Dynamic torque	12,5 daNm	at 500 n/min.	Minimum time between two connections	20 sec
	11,0 daNm	at 1000 n/min.		
	8,2 daNm	at 1500 n/min.		
	7,5 daNm	at 2000 n/min.		
	6,7 daNm	at 2500 n/min.	Max speed	5000 n/min.
	6,5 daNm	at 3000 n/min.	Weight	5,5 Kg

Electric absorption	Resistance (Ω)		Current (A)		Power (W)	
	20° C	120° C	20° C	120° C	20° C	120° C
12 V DC	4,00	5,60	3,33	2,00	40,00	24,00
24 V DC	20,00	28,00	1,26	0,77	30,30	18,18

All technical data are at 20°C / at 120 °C the performance is 20% reduced.
All electromagnetic clutches are reversible.

Electromagnetic Clutches - Torque 14 daNm
Pump Group: Gr. 1-2-3 - Gr. 2 Bosch - Gr. 3 Bosch - SAE A - SAE B
Twin "A" Section Pulley diam. 153

ORDER CODE

30931 - 30803 - [ ]

Electromagnetic Clutch
Torque 14 daNm - Twin "A" Pulley diam. 153

Pump Flange	Voltage	Code
Gr. 1 - 2	12 V DC	30929
Gr. 1 - 2	24 V DC	30930
Gr. 2 Bosch	12 V DC	30929/2B
Gr. 2 Bosch	24 V DC	30930/2B
Gr. 3	12 V DC	30931
Gr. 3	24 V DC	30932
Gr. 3 Bosch	12 V DC	30931/3B
Gr. 3 Bosch	24 V DC	30932/3B
SAE A	12 V DC	30929/SA
SAE A	24 V DC	30930/SA
SAE B	12 V DC	30929/SB
SAE B	24 V DC	30930/SB

Flanges
(see page 29)

- - Gr. 1 - 2
30817 - Gr. 2 Bosch
30803 - Gr. 3
30821 - Gr. 3 Bosch
30420.3 - SAE A
30420.1 - SAE B

Special versions

SPARE PARTS LIST

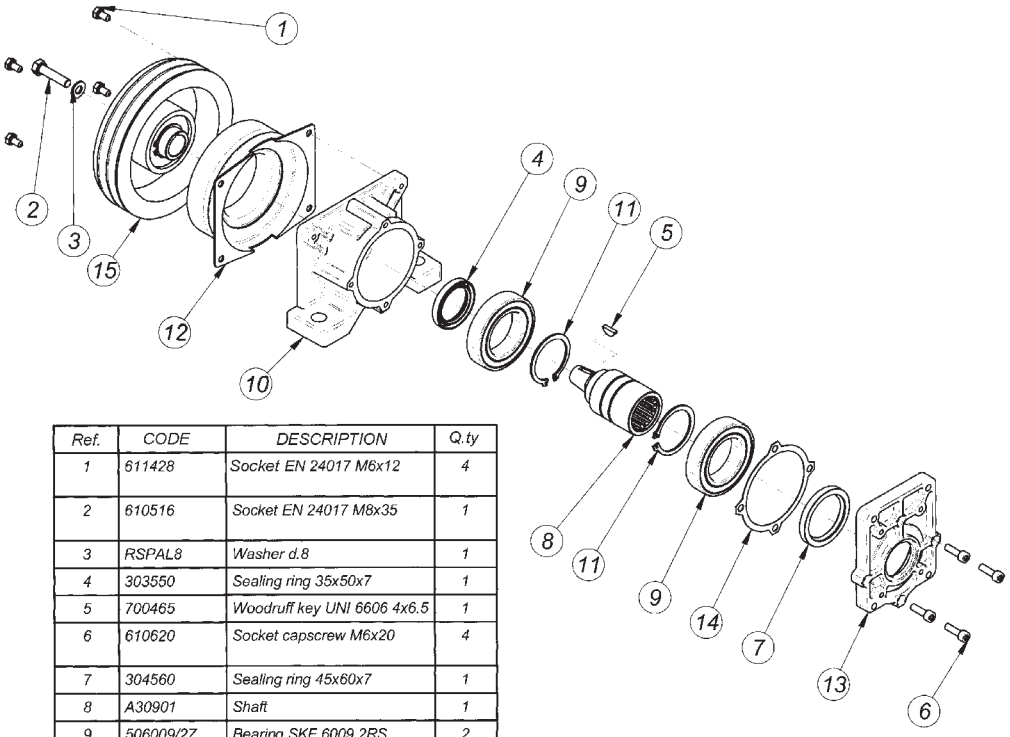

Ref.	CODE	DESCRIPTION	Q.ty
1	611428	Socket EN 24017 M6x12	4
2	610516	Socket EN 24017 M8x35	1
3	RSPAL8	Washer d.8	1
4	303550	Sealing ring 35x50x7	1
5	700465	Woodruff key UNI 6606 4x6.5	1
6	610620	Socket capscrew M6x20	4
7	304560	Sealing ring 45x60x7	1
8	A30901	Shaft	1
9	506009/2Z	Bearing SKF 6009 2RS	2
10	30009.1	Housing	1
11	904500	Snap ring d.45	2
12	401214/153 402414/153	Coil	1
13	30900.1	Flange for pumps Gr 1 - 2	1
14	30009.1.1	Gasket	1
15	4014/153P	Electric clutch	1

Electromagnetic Clutches - Torque 14 daNm
Pump Group: Gr. 1-2-3 - Gr. 2 Bosch - Gr. 3 Bosch - SAE A - SAE B
Twin "A" Section Pulley diam. 178

INSTALLATION DRAWING
30980: 12 Volt
30981: 24 Volt

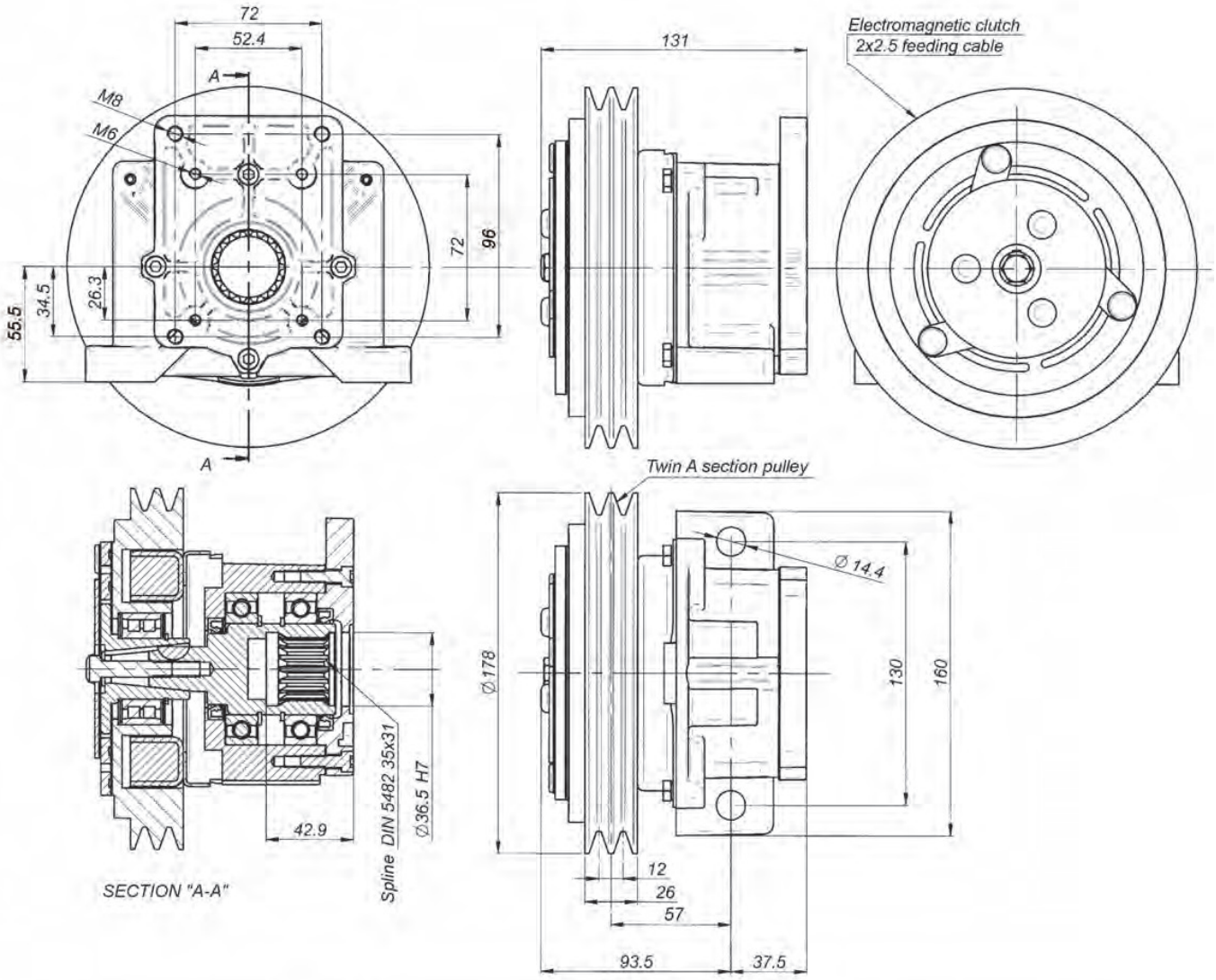

Nominal torque	11,8 daNm		Connection time	25 ms
Static torque	14,0 daNm		Disconnection time	40 ms
Dynamic torque	12,5 daNm	at 500 n/min.	Minimum time between two connections	20 sec
	11,0 daNm	at 1000 n/min.		
	8,2 daNm	at 1500 n/min.		
	7,5 daNm	at 2000 n/min.		
	6,7 daNm	at 2500 n/min.	Max speed	5000 n/min.
	6,5 daNm	at 3000 n/min.	Weight	5,8 Kg

Electric absorption	Resistance (Ω)		Current (A)		Power (W)	
	20° C	120° C	20° C	120° C	20° C	120° C
12 V DC	4,00	5,60	3,33	2,00	40,00	24,00
24 V DC	20,00	28,00	1,26	0,77	30,30	18,18

All technical data are at 20°C / at 120 °C the performance is 20% reduced.
All electromagnetic clutches are reversible.

Electromagnetic Clutches - Torque 14 daNm
Pump Group: Gr. 1-2-3 - Gr. 2 Bosch - Gr. 3 Bosch - SAE A - SAE B
Twin "A" Section Pulley diam. 178

ORDER CODE

30982 - 30803 - [ ]

Electromagnetic Clutch
Torque 14 daNm - Twin "A" Pulley diam. 178

Pump Flange	Voltage	Code	Flanges (see page 29)
Gr. 1 - 2	12 V DC	30980	- - Gr. 1 - 2
Gr. 1 - 2	24 V DC	30981	
Gr. 2 Bosch	12 V DC	30980/2B	30817 - Gr. 2 Bosch
Gr. 2 Bosch	24 V DC	30981/2B	
Gr. 3	12 V DC	30982	30803 - Gr. 3
Gr. 3	24 V DC	30983	
Gr. 3 Bosch	12 V DC	30982/3B	30821 - Gr. 3 Bosch
Gr. 3 Bosch	24 V DC	30983/3B	
SAE A	12 V DC	30980/SA	30420.3 - SAE A
SAE A	24 V DC	30981/SA	
SAE B	12 V DC	30980/SB	30420.1 - SAE B
SAE B	24 V DC	30981/SB	

Special versions

SPARE PARTS LIST

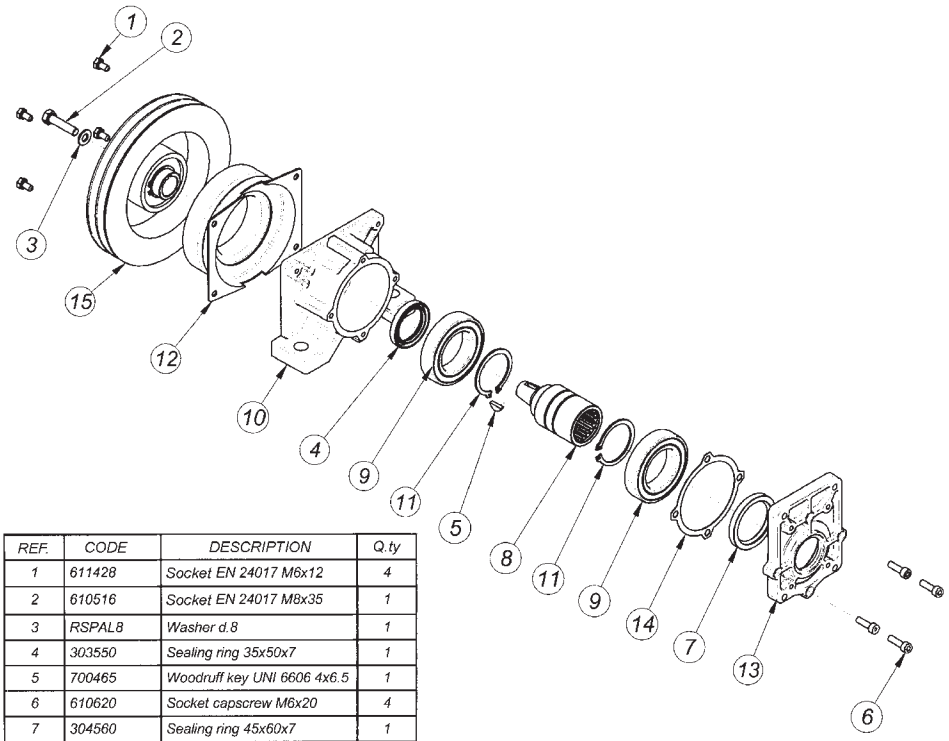

REF.	CODE	DESCRIPTION	Q.ty
1	611428	Socket EN 24017 M6x12	4
2	610516	Socket EN 24017 M8x35	1
3	RSPAL8	Washer d.8	1
4	303550	Sealing ring 35x50x7	1
5	700465	Woodruff key UNI 6606 4x6.5	1
6	610620	Socket capscrew M6x20	4
7	304560	Sealing ring 45x60x7	1
8	A30901	Shaft	1
9	506009/2Z	Bearing SKF 6009 2RS	2
10	30009.1	Housing	1
11	904500	Snap ring d.45	2
12	401214/175 402414/175	Coil	1
13	30900.1	Flange for pumps Gr 1 - 2	1
14	30009.1.1	Gasket	1
15	4014/175P	Electric clutch	1

Electromagnetic Clutches - Torque 14 daNm
Pump Group: Gr. 1-2-3 - Gr. 2 Bosch - Gr. 3 Bosch - SAE A - SAE B
7 PLV Section Pulley

INSTALLATION DRAWING
30929-1/7: 12 Volt
30930-1/7: 24 Volt

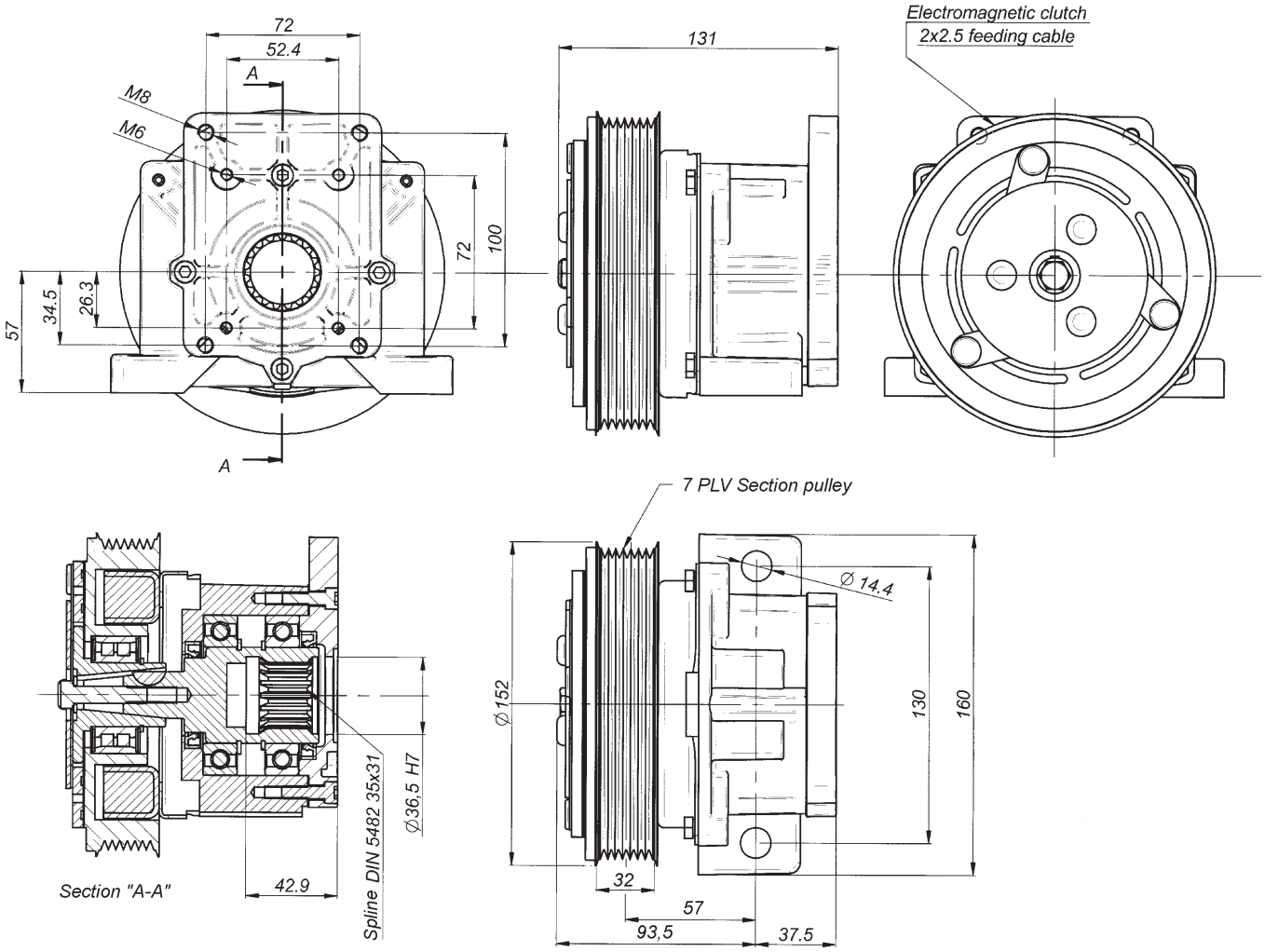

Nominal torque	11,8 daNm		Connection time	25 ms
Static torque	14,0 daNm		Disconnection time	40 ms
Dynamic torque	12,5 daNm	at 500 n/min.	Minimum time between two connections	20 sec
	11,0 daNm	at 1000 n/min.		
	8,2 daNm	at 1500 n/min.		
	7,5 daNm	at 2000 n/min.		
	6,7 daNm	at 2500 n/min.	Max speed	5000 n/min.
	6,5 daNm	at 3000 n/min.	Weight	5,5 Kg

Electric absorption	Resistance (Ω)		Current (A)		Power (W)	
	20° C	120° C	20° C	120° C	20° C	120° C
12 V DC	4,00	5,60	3,33	2,00	40,00	24,00
24 V DC	20,00	28,00	1,26	0,77	30,30	18,18

All technical data are at 20°C / at 120 °C the performance is 20% reduced.
All electromagnetic clutches are reversible.

Electromagnetic Clutches - Torque 14 daNm
Pump Group: Gr. 1-2-3 - Gr. 2 Bosch - Gr. 3 Bosch - SAE A - SAE B
7 PLV Section Pulley

ORDER CODE

30931-1/7 - 30803 - [ ]

Electromagnetic Clutch
Torque 14 daNm - 7 PLV Pulley

Pump Flange	Voltage	Code	Flanges (see page 29)
Gr. 1 - 2	12 V DC	30929-1/7	- - Gr. 1 - 2
Gr. 1 - 2	24 V DC	30930-1/7	
Gr. 2 Bosch	12 V DC	30929-1/7/2B	30817 - Gr. 2 Bosch
Gr. 2 Bosch	24 V DC	30930-1/7/2B	
Gr. 3	12 V DC	30931-1/7	30803 - Gr. 3
Gr. 3	24 V DC	30932-1/7	
Gr. 3 Bosch	12 V DC	30931-1/7/3B	30821 - Gr. 3 Bosch
Gr. 3 Bosch	24 V DC	30932-1/7/3B	
SAE A	12 V DC	30929-1/7/SA	30420.3 - SAE A
SAE A	24 V DC	30930-1/7/SA	
SAE B	12 V DC	30929-1/7/SB	30420.1 - SAE B
SAE B	24 V DC	30930-1/7/SB	

Special versions

SPARE PARTS LIST

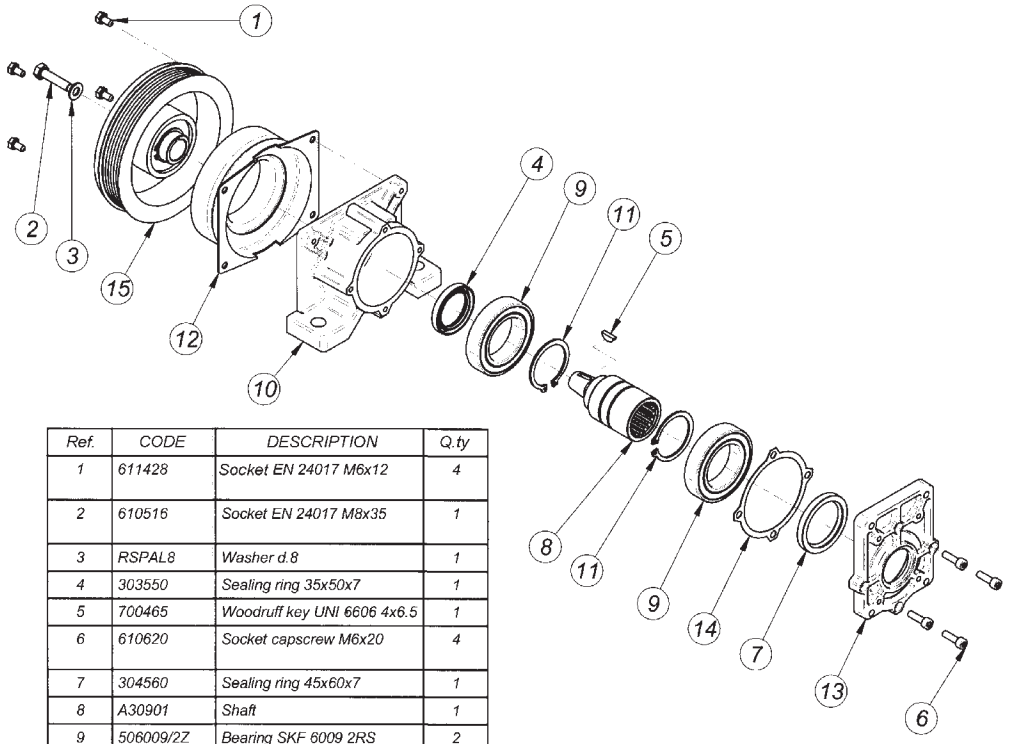

Ref.	CODE	DESCRIPTION	Q.ty
1	611428	Socket EN 24017 M6x12	4
2	610516	Socket EN 24017 M8x35	1
3	RSPAL8	Washer d.8	1
4	303550	Sealing ring 35x50x7	1
5	700465	Woodruff key UNI 6606 4x6.5	1
6	610620	Socket capscrew M6x20	4
7	304560	Sealing ring 45x60x7	1
8	A30901	Shaft	1
9	506009/2Z	Bearing SKF 6009 2RS	2
10	30009.1	Housing	1
11	904500	Snap ring d.45	2
12	401214/PLV 402414/PLV	Coil	1
13	30900.1	Flange for pumps Gr 1 - 2	1
14	30009.1.1	Gasket	1
15	4014/PLVP 7	Electric clutch PLV	1

Electromagnetic Clutches - Torque 21 daNm
Pump Group: Gr. 1-2-3 - Gr. 2 Bosch - Gr. 3 Bosch - SAE A - SAE B
Twin "A" Section Pulley diam. 186

INSTALLATION DRAWING
30990: 12 Volt
30991: 24 Volt

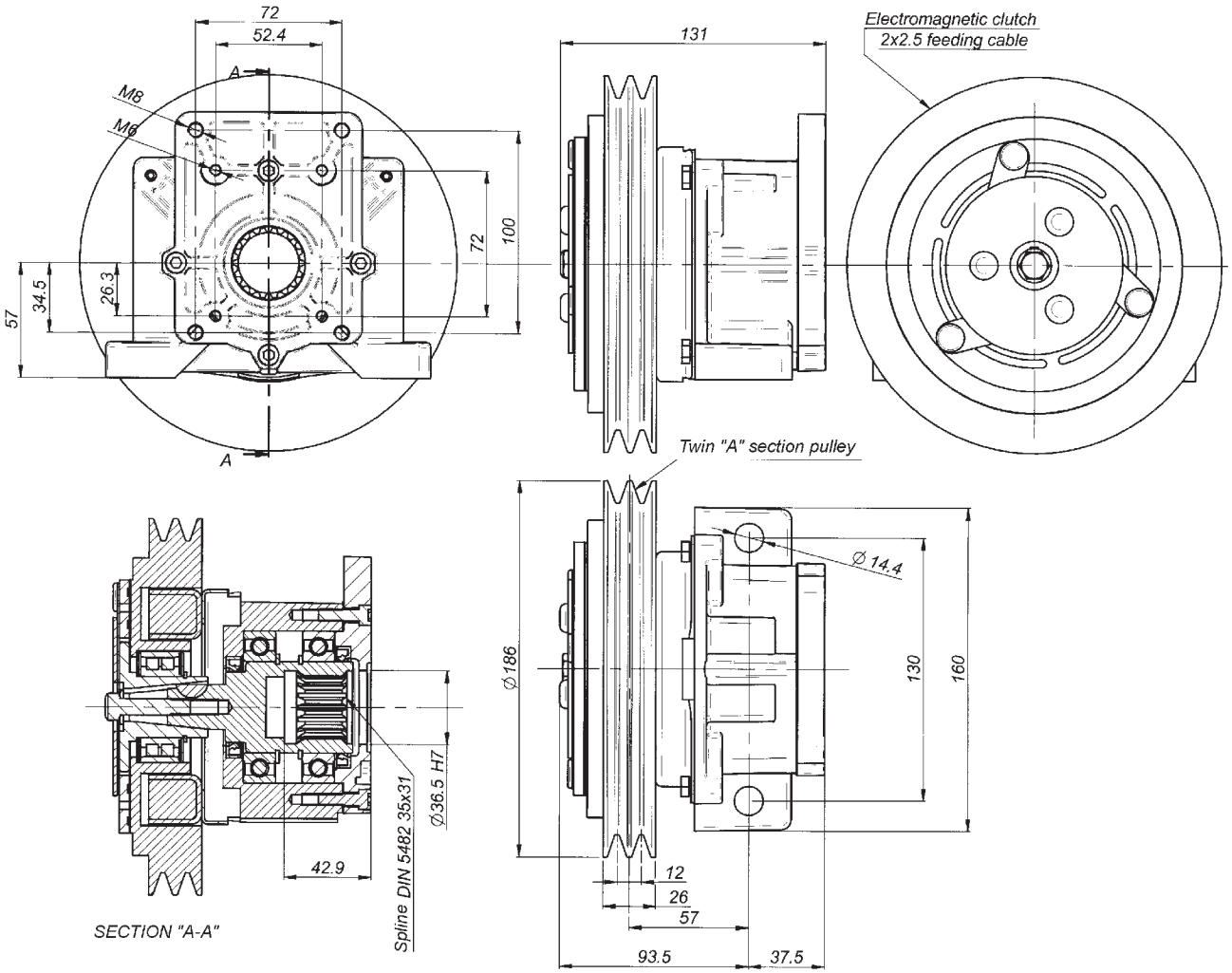

Nominal torque	16,0 daNm		Connection time	25 ms
Static torque	21,0 daNm		Disconnection time	40 ms
Dynamic torque	14,5 daNm	at 500 n/min.	Minimum time between two connections	20 sec
	12,0 daNm	at 1000 n/min.		
	9,5 daNm	at 1500 n/min.		
	8,8 daNm	at 2000 n/min.		
	8,0 daNm	at 2500 n/min.	Max speed	5000 n/min.
	7,8 daNm	at 3000 n/min.	Weight	8 Kg

Electric absorption	Resistance (Ω)		Current (A)		Power (W)	
	20° C	120° C	20° C	120° C	20° C	120° C
12 V DC	2,96	3,97	4,05	2,71	48,70	32,50
24 V DC	12,30	16,60	1,95	1,31	47,00	30,70

All technical data are at 20°C / at 120 °C the performance is 20% reduced.
All electromagnetic clutches are reversible.

Electromagnetic Clutches - Torque 21 daNm
Pump Group: Gr. 1-2-3 - Gr. 2 Bosch - Gr. 3 Bosch - SAE A - SAE B
Twin "A" Section Pulley diam. 186

ORDER CODE

30992 - 30803 - [ ]

Electromagnetic Clutch
Torque 21 daNm - Twin "A" Pulley diam. 186

Pump Flange	Voltage	Code	Flanges (see page 29)
Gr. 1 - 2	12 V DC	30990	- - Gr. 1 - 2
Gr. 1 - 2	24 V DC	30991	
Gr. 2 Bosch	12 V DC	30990/2B	30817 - Gr. 2 Bosch
Gr. 2 Bosch	24 V DC	30991/2B	
Gr. 3	12 V DC	30992	30803 - Gr. 3
Gr. 3	24 V DC	30993	
Gr. 3 Bosch	12 V DC	30992/3B	30821 - Gr. 3 Bosch
Gr. 3 Bosch	24 V DC	30993/3B	
SAE A	12 V DC	30990/SA	30420.3 - SAE A
SAE A	24 V DC	30991/SA	
SAE B	12 V DC	30990/SB	30420.1 - SAE B
SAE B	24 V DC	30991/SB	

Special versions

SPARE PARTS LIST

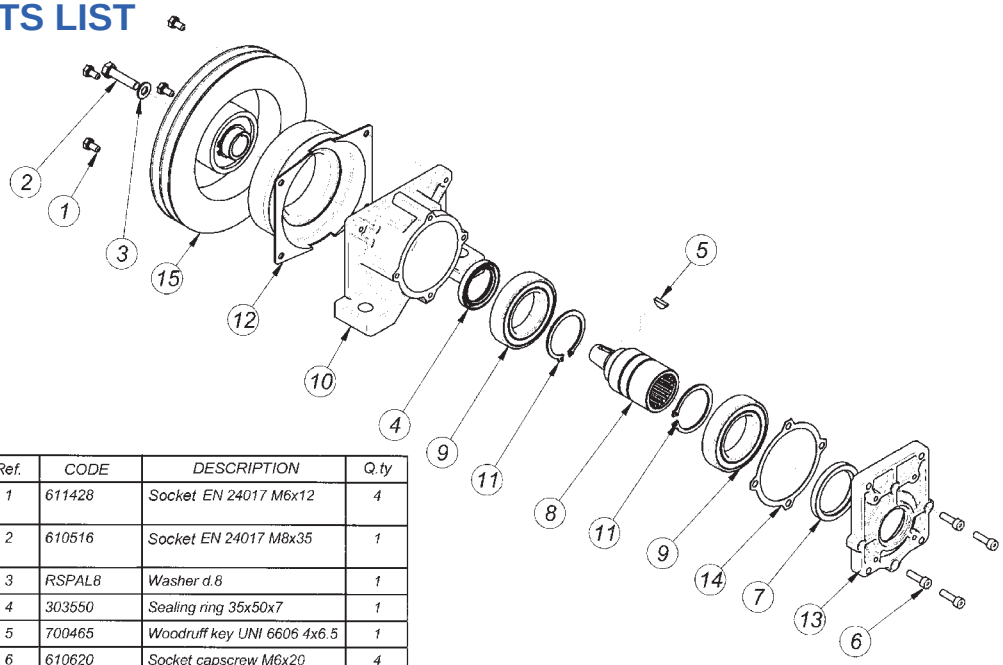

Ref.	CODE	DESCRIPTION	Q.ty
1	611428	Socket EN 24017 M6x12	4
2	610516	Socket EN 24017 M8x35	1
3	RSPAL8	Washer d.8	1
4	303550	Sealing ring 35x50x7	1
5	700465	Woodruff key UNI 6606 4x6.5	1
6	610620	Socket capscrew M6x20	4
7	304560	Sealing ring 45x60x7	1
8	A30901	Shaft	1
9	506009/2Z	Bearing SKF 6009 2RS	2
10	30009.1	Housing	1
11	904500	Snap ring d.45	2
12	401221/186B 402421/186B	Coil	1
13	30900.1	Flange for pumps Gr 1 - 2	1
14	30009.1.1	Gasket	1
15	4021/186BP	Electric clutch PLV	1

Electromagnetic Clutches - Torque 30 daNm
Pump Group: Gr. 2-3-4 - Gr. 3 Bosch - SAE A - SAE B - LG 20-35-50-75
Twin "B" Section Pulley diam. 229

INSTALLATION DRAWING
30940/SF: 12 Volt
30941/SF: 24 Volt

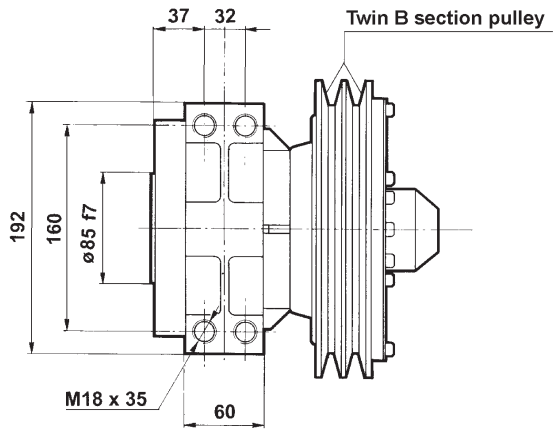

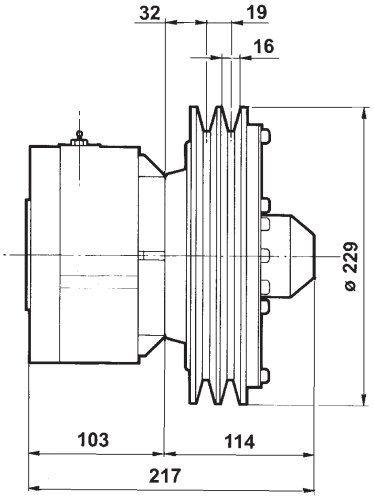

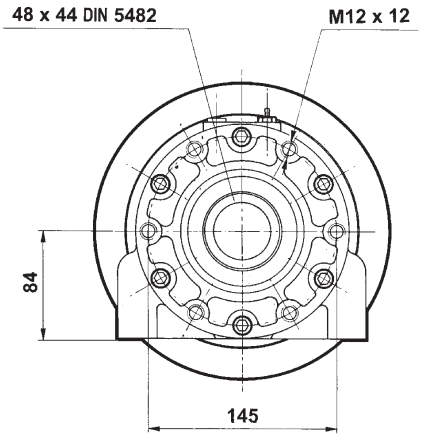

Nominal torque	38,0 daNm		Connection time	25 ms
Static torque	50,0 daNm		Disconnection time	40 ms
Dynamic torque	33,0 daNm	at 500 n/min.	Minimum time between two connections	20 sec
	31,5 daNm	at 1000 n/min.		
	28,7 daNm	at 1500 n/min.		
	28,0 daNm	at 2000 n/min.		
	27,2 daNm	at 2500 n/min.	Max speed	5000 n/min.
	27,0 daNm	at 3000 n/min.	Weight	20 Kg

Electric absorption	Resistance (Ω)		Current (A)		Power (W)	
	20° C	120° C	20° C	120° C	20° C	120° C
12 V DC	1,81	2,60	6,60	4,62	80,00	56,00
24 V DC	7,40	10,50	3,25	2,30	78,00	54,60

All technical data are at 20°C / at 120 °C the performance is 20% reduced.
All electromagnetic clutches are reversible.

Electromagnetic Clutches - Torque 30 daNm
Pump Group: Gr. 2-3-4 - Gr. 3 Bosch - SAE A - SAE B - LG 20-35-50-75
Twin "B" Section Pulley diam. 229

ORDER CODE

30940 - 30400 - [ ]

Electromagnetic Clutch
Torque 30 daNm - Twin "B" Pulley diam. 229

Pump Flange	Voltage	Code
Without flange	12 V DC	30940/SF
Without flange	24 V DC	30941/SF
Gr. 2	12 V DC	30940
Gr. 2	24 V DC	30941
Gr. 3	12 V DC	30942
Gr. 3	24 V DC	30943
Gr. 3,5	12 V DC	30944
Gr. 3,5	24 V DC	30945
Gr. 4	12 V DC	30946
Gr. 4	24 V DC	30947
Gr. 3 Bosch	12 V DC	30948
Gr. 3 Bosch	24 V DC	30949
SAE A	12 V DC	30950
SAE A	24 V DC	30951
SAE B	12 V DC	30952
SAE B	24 V DC	30953
SAE C	12 V DC	30954
SAE C	24 V DC	30955
LG 20-35	12 V DC	30958
LG 20-35	24 V DC	30959
LG 50	12 V DC	30960
LG 50	24 V DC	30961
LG 75	12 V DC	30962
LG 75	24 V DC	30963

Flanges
(see page 30)

-
- 30400 - Gr. 2
- 30401 - Gr. 3
- 30402 - Gr. 3,5
- 30403 - Gr. 4
- 30417 - Gr. 3 Bosch
- 30420 - SAE A
- 30422 - SAE B
- 30432 - SAE C
- 30461 - LG 20-35
- 30462 - LG 50
- 30463 - LG 75

Special versions

Electromagnetic Clutches - Torque 30 daNm
Pump Group: Gr. 2-3-4 - Gr. 3 Bosch - SAE A - SAE B - LG 20-35-50-75
Twin "B" Section Pulley diam. 229

SPARE PARTS LIST

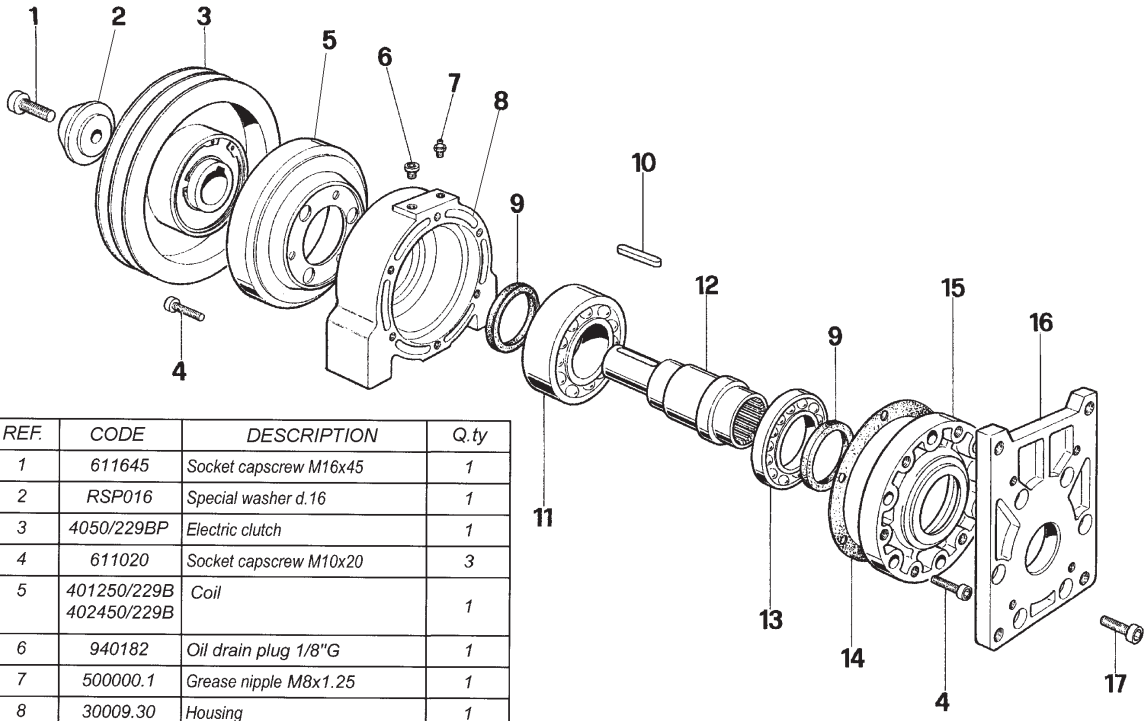

REF.	CODE	DESCRIPTION	Q.ty
1	611645	Socket capscrew M16x45	1
2	RSP016	Special washer d.16	1
3	4050/229BP	Electric clutch	1
4	611020	Socket capscrew M10x20	3
5	401250/229B 402450/229B	Coil	1
6	940182	Oil drain plug 1/8"G	1
7	500000.1	Grease nipple M8x1.25	1
8	30009.30	Housing	1
9	306075	Sealing ring 60x75x8	2
10	421086	Key 10x8x60 UNI 6604	1
11	503212/Z	Bearing 3212 A	1
12	Ac30940	Shaft	1
13	501601/Z	Bearing 16012 A	1
14	30470.2	Gasket	1
15	30470	Round flange	1
16	30900.1	Flange	1
17	611025	Socket capscrew M10x25	6

Flanges for Electromagnetic Clutches 10, 14, 21 daNm

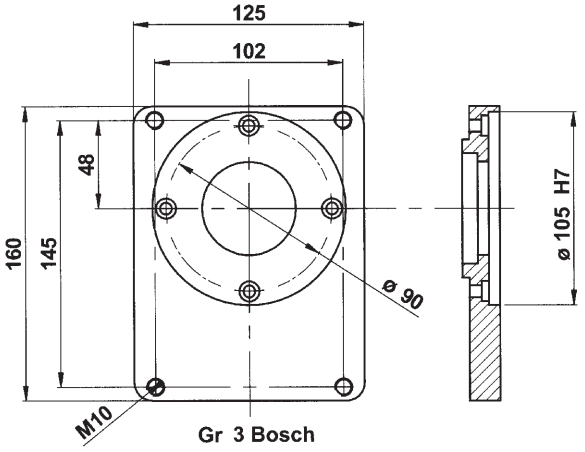

Gr 3 Bosch
30821

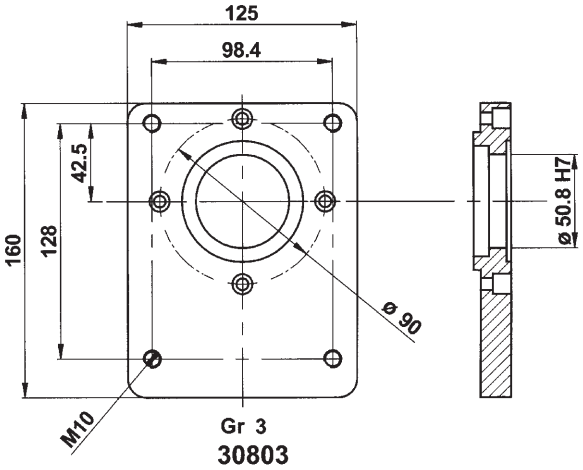

Gr 3
30803

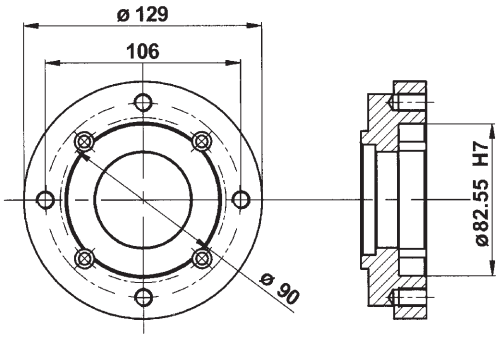

SAE A
30420.3

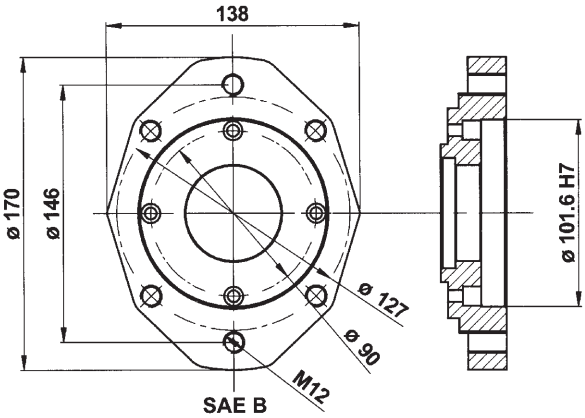

SAE B
30420.1

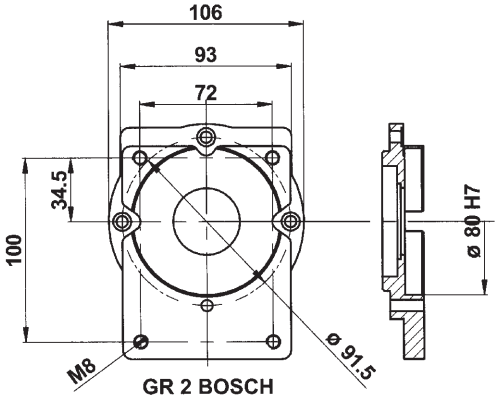

GR 2 BOSCH
30817

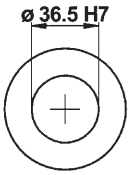

920266

Flanges for Electromagnetic Clutches 30 daNm

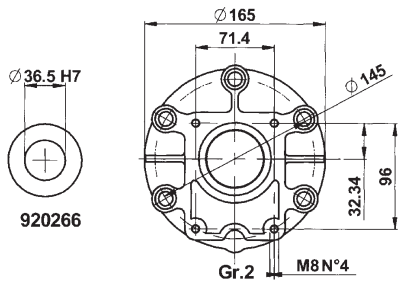

30400

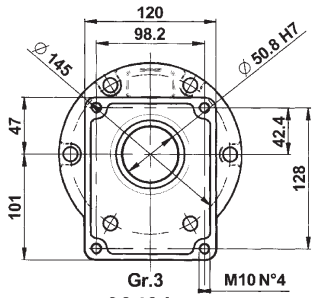

30401

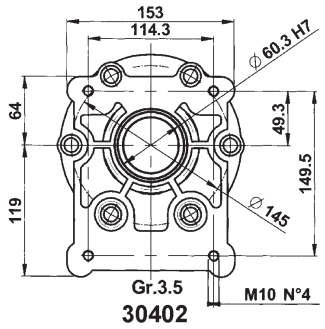

30402

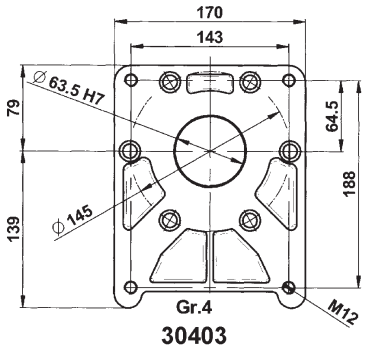

30403

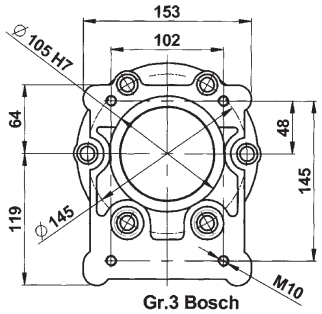

30417

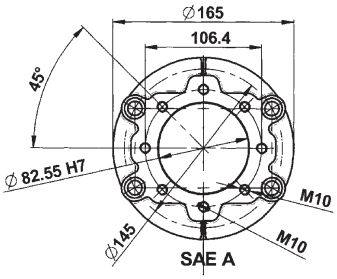

30420

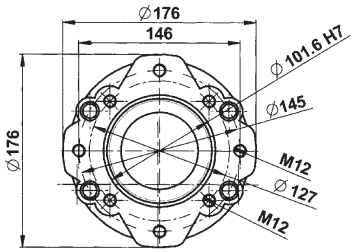

30422

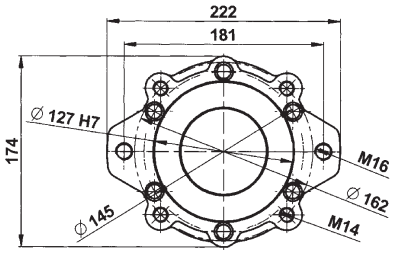

30432

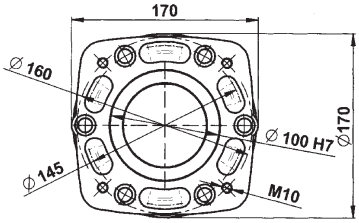

30461

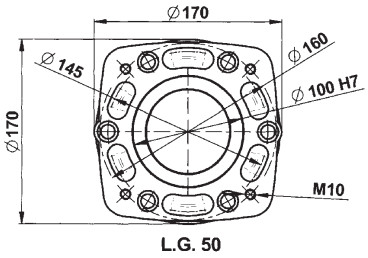

30462

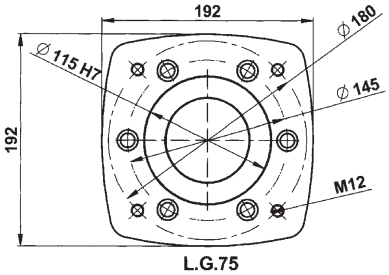

30463

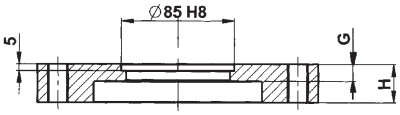

Section for all flanges

Flange	Type	Gr.2	Gr.3	Gr.3.5	Gr.4	Gr.3 BOSCH	SAE A	SAE B	SAE C	LG. 20-35	LG. 50	LG.75
	Code	30400	30401	30402	30403	30417	30420	30422	30432	30461	30462	30463
Dimensions	H	21	23	24	23	19	25	25	28	34	41	41
	G	17	21	11.5	16	12	21	12	16	25	32.5	33

As HANSA-TMP has a very extensive range of products and some products have a variety of applications, the information supplied may often only apply to specific situations.

If the catalogue does not supply all the information required, please contact HANSA-TMP.

In order to provide a comprehensive reply to queries we may require specific data regarding the proposed application.

Whilst every reasonable endeavour has been made to ensure accuracy, this publication cannot be considered to represent part of any contract, whether expressed or implied.

HANSA-TMP reserves the right to amend specifications at their discretion.

HANSA · TMP srl

HYDRAULIC COMPONENTS
HYDROSTATIC TRANSMISSIONS
GEARBOXES - ACCESSORIES

Via M. L. King, 6 - **41122 MODENA (ITALY)**
Tel: +39 059 415 711
Fax: +39 059 415 729 / 059 415 730
INTERNET: http://www.hansatmp.it
E-MAIL: hansatmp@hansatmp.it